# RSS-233 - 20K Truck

## *Self-Steering Air-Ride Suspension*

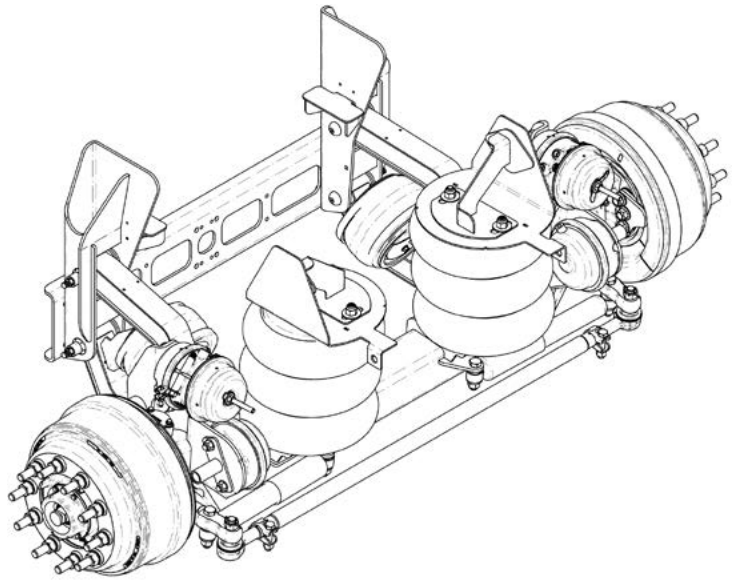

# Installation and Service Manual



RIDEWELL SUSPENSIONS

## Introduction

The Ridewell Self-Steering 233 20K Truck Suspension System is a fully integrated, liftable auxiliary axle suspension system for various applications. The suspension can be configured with an optional steering lock. NOTE: The suspension system should be integrated with a drum-brake axle assembly configured for 20K Truck Roll-Off Applications.

## Self-Steering Option

Self-steering suspensions are designed to steer only in the forward direction. The suspension must be raised off the ground or locked into a non-steering configuration during reverse travel to avoid damage.
Use caution when maneuvering in reverse with the steering lock engaged. The driver should maintain slow maneuvering speeds and avoid extreme turns.

1. Ridewell Suspensions strongly recommends the use of automated systems that raise/lock the lift-axle during reverse travel.
2. For manual operations, Ridewell recommends the installation of a visual/audible indicator to assist the driver.

⚠CAUTION Failure to lift the suspension and-or engage the steering-lock during reverse travel can cause component damage and void the warranty.

## Notes and Cautions

All work should be completed by a trained technician using the proper tools and safe work procedures.

Read through the entire Installation and Service Manual (ISM) before performing any installation or maintenance procedures.

The ISM uses two service notes as important safety guidelines. The service notes are defined as:

"NOTE": Provides additional instructions or procedures to complete tasks and ensure the suspension and other components function properly.

⚠CAUTION Indicates a hazardous situation or unsafe practice that, if not avoided, could result in equipment damage and serious injury.

**RIDEWELL SUSPENSIONS**
The Engineered Suspension Company

| |
|---|
| PART NO: |
| SUSP. NO: |
| SERIAL NO: |

**GROSS AXLE WEIGHT RATING CERTIFICATION IS PER THE FINAL STAGE MANUFACTURER OR ALTERER.**

**THIS PRODUCT MAY BE COVERED UNDER ONE OR MORE PATENTS, ADDITIONAL PATENTS MAY BE PENDING.**

**www.ridewellcorp.com** **(800) 641-4122**

## Suspension Identification Tag

The **Part Number** is listed as a 606- Installation/Assembly Number when other components are factory installed with the suspension. The **Suspension Number** and **Serial Number** refer to the individual suspension model and the date of manufacture.

Refer to the suspension number/part number and serial number when contacting Ridewell for customer service, replacement parts and warranty information.

**Additional kingpin installation and maintenance information is provided in Technical Publication 9710033– "233_232-Kingpin/Bushing-Parts Guide"**

**Scan the QR-Code to the left and locate the publication under the "Axles-Service Part Information" heading.**

## Prior to Installation

Refer to the engineering drawing to confirm dimensional requirements and the range of ride heights available. Installations can vary and procedures should be adapted for different vehicles as needed.

- The Gross Axle Weight Rating (GAWR) is determined by the system component with the lowest load rating. Please consult with tire, wheel, axle and brake manufacturers before installation to determine the GAWR.
- If vehicle chassis modifications are required, consult with the vehicle manufacturer to ensure that such changes are permitted.
- Welding or altering of suspension components is not permitted without the express written permission of Ridewell Suspensions.

### Installer Responsibilities

The installer of the suspension has the sole responsibility for proper attachment of the suspension system to the vehicle chassis.

- The installer is responsible for locating the suspension system on the vehicle to provide the proper load distribution.
- The installer must verify that vehicle crossmembers are positioned to support the suspension at the installing location.
- The installer must verify there is sufficient clearance for proper functioning of the installed auxiliary suspension – air springs; brake chambers; steering components; axle (including axle to driveline clearance); and, tires and wheels.
- It is the installer's responsibility to determine that axle spacing conforms to any applicable federal and local bridge laws.
- The installer must verify that air reservoir volume requirements are met after suspension installation. Consult the vehicle manufacturer or Federal Motor Vehicle Safety Standards (FMVSS) 121 for more information.

## Suspension Mounting

Refer to the engineering drawing for the suspension travel table; torque specifications; and, spacing and clearance requirements for mounting the suspension.

### Bolt-On Installation Procedure

Grade-8 bolts, flanged locknuts or locknuts with hardened washers are supplied by the installer.

The hanger locator flanges - when supplied - are installed to a preset ride height (Figure 1).

Loosen the crosschannel nuts on the 233-20K Roll-Off Truck Suspension before installation.

1. Measure the vehicle frame-width and hanger-to-hanger inside dimensions. Customer-supplied filler plates are required for the hangers and air spring mounting plates if vehicle frame-width is narrower than suspension preset frame width.
2. Place the suspension, with any hanger/air spring filler plates or hanger/air spring spacers, in the desired location for installation.
   NOTE: Frame crossmember must be located within six inches of leading or trailing edge of hanger.
3. Check the installation location for adequate clearance. The top of the hangers and air spring mounting plates must be parallel to the chassis frame to maintain the proper caster angle.
4. The frame hangers and air spring mounting plates should be perpendicular to the chassis frame and in alignment with each other. Clamp the hangers, the mounting plates, and any required spacer and filler plates firmly in place.
5. Refer to the engineering drawing for the hanger/air spring mounting plate bolt-hole locations.
   ⚠CAUTION If the recommended bolt-hole locations are not available, locate and drill the bolt-holes as far apart as possible to provide the most support for the assembled suspension.
   Check to make sure that wires, hoses or other components located within the frame rail are not affected by drilling.
6. Center-punch and drill six bolt-holes in each frame hanger. Bolt each hanger to the frame with 5/8-inch Grade 8 bolts and locknuts.
7. Center-punch and drill two bolt-holes in each air spring mounting bracket. Bolt each air spring bracket to the frame with two 5/8-inch Grade 8 bolts and locknuts.
8. Install/connect air control kit (ACK) to suspension (Page 6). Check entire air system for leaks.

**Figure 1.**

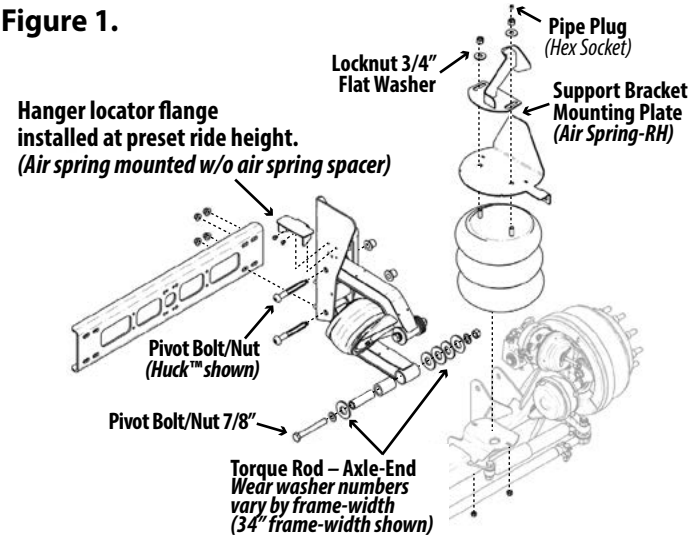


9. Perform final assembly and inspection.

⚠CAUTION Reduce pressure to load springs below 10 PSI when lowering an auxiliary axle on an unloaded vehicle. Failure to reduce air pressure could cause drive axles to rise and vehicle could roll in an unsafe manner.

### Final Assembly and Inspection

1. Verify components are torqued to specs (Pg 12).
2. Install wheels and tires.
3. Check that tires are inflated to recommended pressure. Check wheel hubs for proper level of lubricant recommended by the manufacturer.
4. Lift the axle to the raised position. Check the air system tubing and connections for leaks.
5. Check that wheels can rotate freely and that brakes and slack adjusters are properly adjusted.
6. Raise and lower suspension assembly (wheels and tires installed) through entire range of travel to verify sufficient clearances for air springs, brake chambers and other components are provided.
7. Check the vehicle's reverse travel options:
   7.1 Check steer-lock operation.
   7.2 Check automated system to verify suspension raises/locks wheels during reverse travel.

   ⚠CAUTION Failure to check reverse-travel can result in component damage and void the warranty.

   ⚠CAUTION Do not lower auxiliary axle while vehicle is moving above 10 mph in forward- or reverse- travel.

Check wheel toe-in setting and adjust, if necessary (between 1/32" and 3/32").

⚠CAUTION Failure to torque bolts/nuts of suspension components to specifications can result in failure of the suspension and void the warranty.

## Wheel Toe Setting

Wheel toe is the relationship of the distance between the front of the tires and the distance between the rear of the tires on the same axle. When the front distance is less than the rear distance, the wheels are in a "toe-in" (positive toe) condition.

The correct setting for the RSS-233 suspension should be toe-in between 1/32" and 3/32".

### Check Wheel Toe Setting

1. Deflate the air springs.
2. Lift the axle enough for tires to rotate freely. Support with jack stands to ensure axle is level.
3. Position tires to point straight ahead. Spin each tire. Use a piece of chalk to mark a line on the center tread all the way around the tire.
4. Use the centerline mark to measure the distance from the front of the tire to the frame. Measure the distance from the back of the tire to the frame.
5. Subtract the front of the tire distance from the rear distance to obtain the wheel toe setting.

### Adjust Wheel Toe

1. Loosen clamps on both ends of the tie rod. Twist the tie rod forward/backward to move the front of the tire towards or away from the frame.
2. Continue rotating the tie rod until the proper toe-in setting is achieved.
3. Torque tie-rod clamps to 60-80 ft-lb (81-108 N-m).

**Regulate load with air spring pressure**

The load capacity of the auxiliary axle is adjusted by increasing or decreasing the pressure to the air springs. By applying more air, the lift axle takes on a greater percentage of the load's weight. The load capacity is decreased as the air pressure decreases.

Accurate readings of the load capacity can be obtained by parking a loaded vehicle over a calibrated scale and lowering the axle onto the scale. The air pressure to the air springs is manually adjusted up or down to obtain the axle load weight at various air pressures.

CAUTION Do not exceed the rated load capacity of the suspension system or other components. Exceeding the capacity can cause component failure and void the warranty.

## Air Control Kit components - Lift Axle

The air control kit (ACK) consists of a pressure regulator with a gauge connected to an air valve controlled by a manual knob or an electric switch. The operator uses the ACK to control the pressure to the air springs to support different loads.

⚠CAUTION The installer is responsible for making sure that air system requirements comply with the appropriate Federal Motor Vehicle Safety Standards.

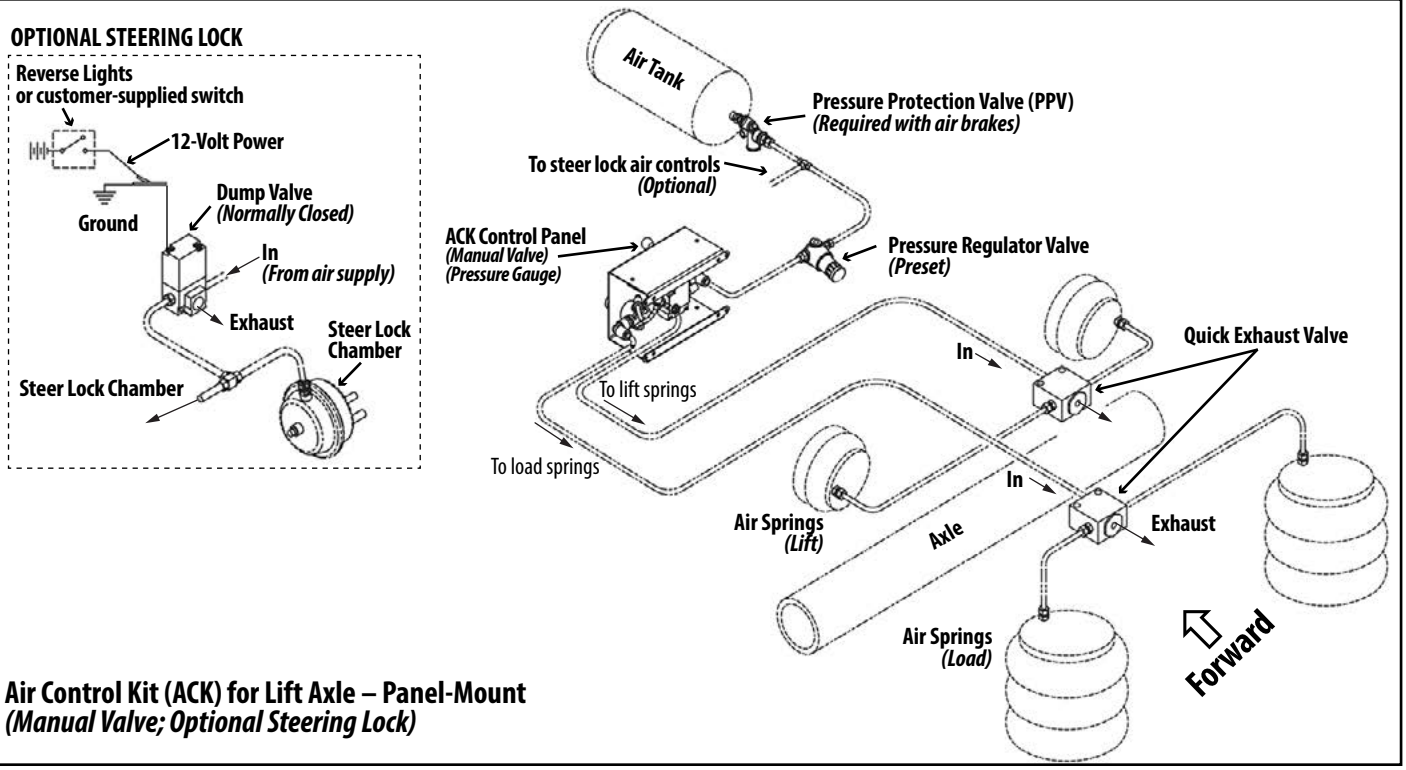


**Air Control Kit (ACK) for Lift Axle – Panel-Mount**
***(Manual Valve; Optional Steering Lock)***

### ACK Installation – Troubleshooting

| Problem | Possible Cause | Solution |
|---|---|---|
| **Air springs fill but do not exhaust.** | — Obstructed air line.<br>— Faulty controls wiring.<br>— Manual override pushed in. | — Check for pinched/blocked lines.<br>— Check wiring with voltmeter and correct wiring/ installation.<br>— Release manual override. |
| **Air system leaks down after a short period of time.** | — Leak in air system beyond accepted standards. NOTE: Some valves will leak at an acceptable rate. | — Pressurize system and spray soapy water solution onto the tubing, valves and fittings. Check for bubbles (leaks).<br>— Check that tubing cuts are straight and smooth. Recut and reassemble fitting joints, if necessary. |
| **Auxiliary unit will not stay up** | — Loose air fitting connection/Damaged air lines.<br>— Air lines to lift and load air springs are reversed.<br>— Damaged or worn air springs. | — Check and retighten fittings. Repair or replace component, as necessary.<br>— Check installation. Air line from regulator goes to (load) air springs.<br>— Replace air spring if worn or damaged. |
| **Auxiliary unit not achieving correct lift** | — Air lines to lift and load air springs are reversed.<br>— Lift air springs do not have proper air pressure.<br>— Interference with driveline/other chassis components.<br>— Air control system not installed correctly. | — Check installation. Air line from regulator goes to (load) air springs.<br>— Check for loose fittings or worn/damaged lines. Verify air tank pressure with gauge.<br>— Visually inspect auxiliary unit operation for proper clearance. Retighten any loose fasteners.<br>— Check air control kit installation; refer to OEM installation procedures. |

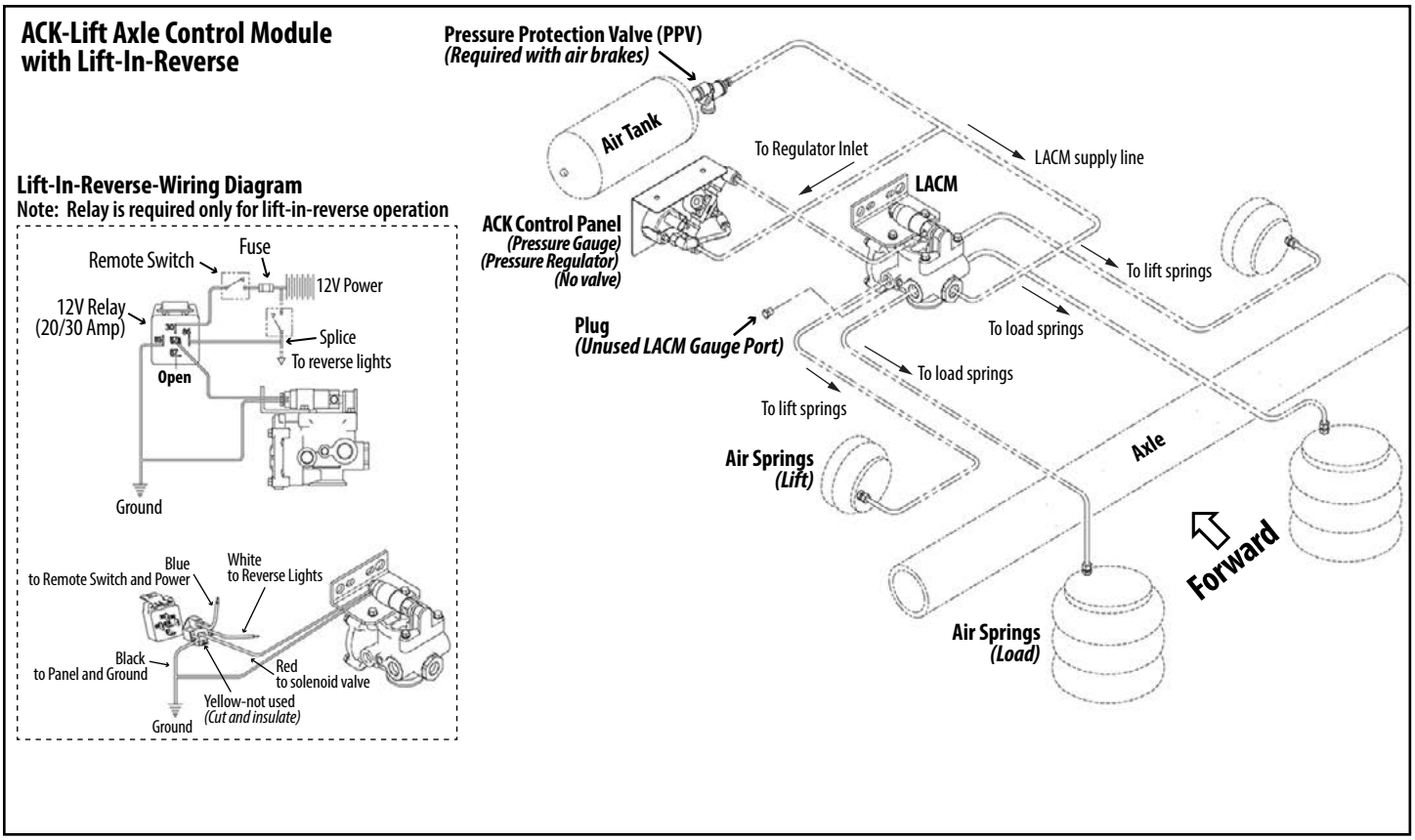


**Figure 2.**
**Example - Air Control Kit using Lift Axle Control Module (LACM) with Lift-In-Reverse system**

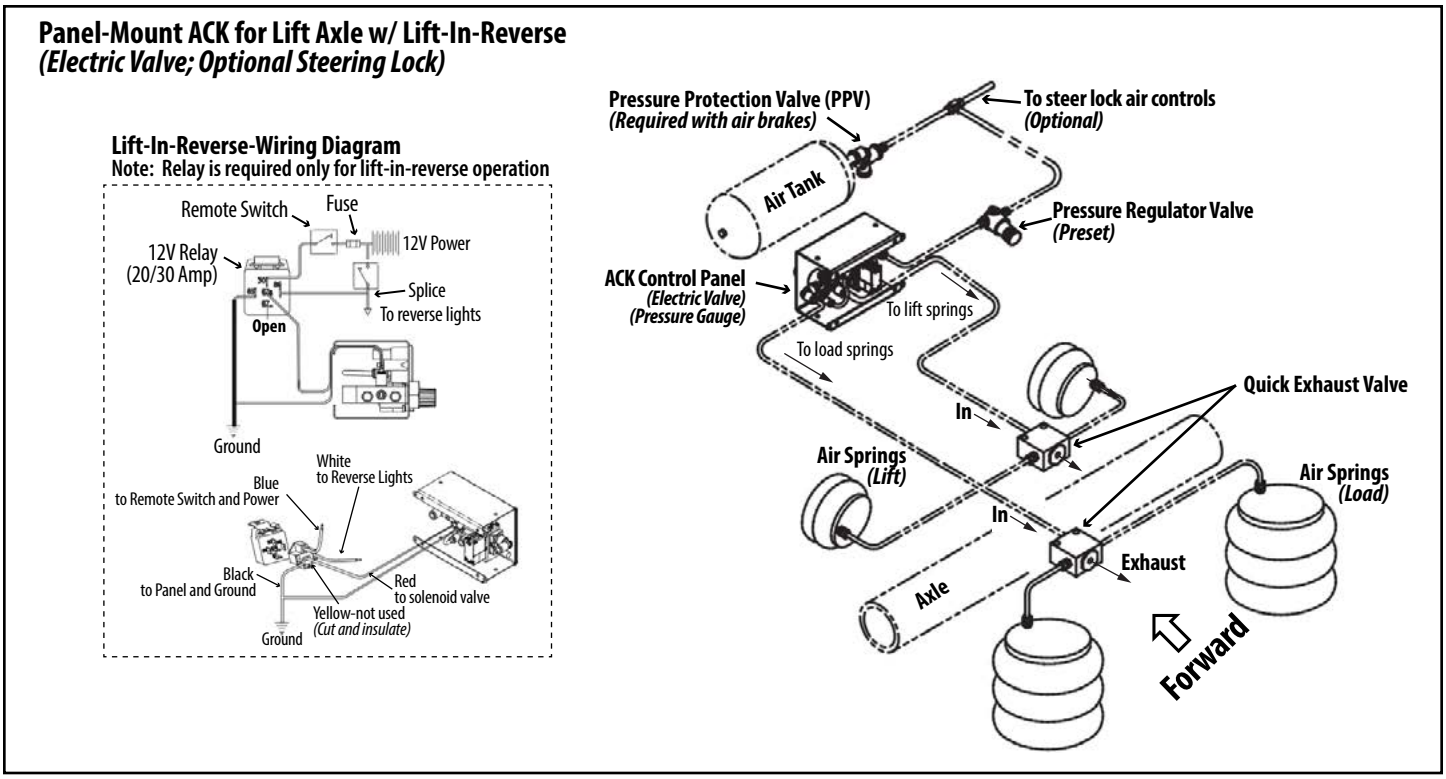


**Figure 3.**
**Example - Air Control Kit using Quick Exhaust Valves (QE Valve) with Lift-In-Reverse system**

## Recommended Service Intervals

Ridewell Suspensions recommends these minimum service intervals for standard duty, on-highway usage suspension applications.

More frequent service intervals are recommended for off-highway/heavier duty applications.

### Daily/Pre-Trip Inspections

___ Visually inspect suspension structure for signs of damage or excessive wear.

___ Check for loose or missing bolts/nuts. Check for irregular movement in suspension system components.

___ Check tires for proper inflation, road damage or excessive wear.

___ Check wheel-ends for obvious signs of lubricant leakage. Check for missing components.

___ Make sure air controls are operating properly. Drain all moisture from air reservoirs.

### First 6,000 miles of use

___ Torque all bolts/nuts to specifications (Page 10).

### Every 12,000 miles of use

___ Lubricate Brake Cam and Slack Adjuster.

___ Grease kingpin thrust bearings. Apply grease in upper and lower grease fittings until new grease is visible at the purge location. Wipe the excess grease from purge areas and grease fittings.

___ Inspect steering damper for damage/wear.

___ Inspect air springs for damage/excessive wear. Torque bolts/nuts to specifications (Page 10).

___ Check air system for leaks.

### First 50,000 miles of use

___ Check wheel-end/knuckle for excessive play.

___ Inspect tie-rod and tie-rod ends for excessive damage/wear. Lubricate tie-rod ends. Verify tie-rod boot is in place and completely over the end of tie-rod. Replace entire tie-rod end if boot is damaged.

___ Check pivot bushings for wear.

___ Torque all suspension system component bolts/nuts to specifications (Page 10).

___ Check (reverse) steer lock operation (if equipped).

___ Verify operation of manual/automatic lift-in-reverse control system (if equipped).

### Annual/100,000 Miles Inspection

___ Inspect pivot connections for worn bushings/wear washers. Replace if necessary. Torque pivot hardware to specifications (Page 10).

___ Check lubrication level in wheel-ends. Refill/Replace lubricant as needed. *(TMC RP 631-Wheel End Lubrication Procedure)*

___ Check frame hanger and air spring mounting plate connections to frame.

___ Check air system for leaks.

___ Test air tank pressure protection valve (PPV) if equipped.

___ Check brakes/brake chambers for damage/function.

⚠CAUTION Failure to exhaust all pressure from the air system before vehicle work can cause serious injury.

⚠CAUTION Failure to torque suspension components to specifications can result in suspension failure and void the warranty.

| Refer to these Technology & Maintenance Council (TMC) Recommended Procedures for additional information: | |
|---|---|
| RP 609 | Self-Adjusting/Manual Brake Adjuster Removal, Installation and Maintenance |
| RP 618 | Wheel Bearing Adjustment Procedure |
| RP 619 | Air System Inspection Procedure |
| RP 622 | Wheel Seal and Bearing Maintenance |
| RP 631 | Wheel End Lubrication Procedures |
| RP 643 | Air Ride Suspension Maintenance Guidelines |
| RP 645 | Tie-Rod End Inspection/Maintenance |
| RP 651 | Steer Axle Maintenance Guidelines |

**Available Wheel-End Lubricants**

| Lubricant Type | Part No. | Item Description |
|---|---|---|
| **Mineral Oil** | **380008G** | (CITGO) MP GearOil 631310001-80W-90 |
| **Synthetic Oil** | **1980006** | (SHELL) Synthetic API GI-5 75W-90 Oil |
| **Synthetic Hard-Pack Grease** | **1980007** | (CITGO) Synthetic Grease |

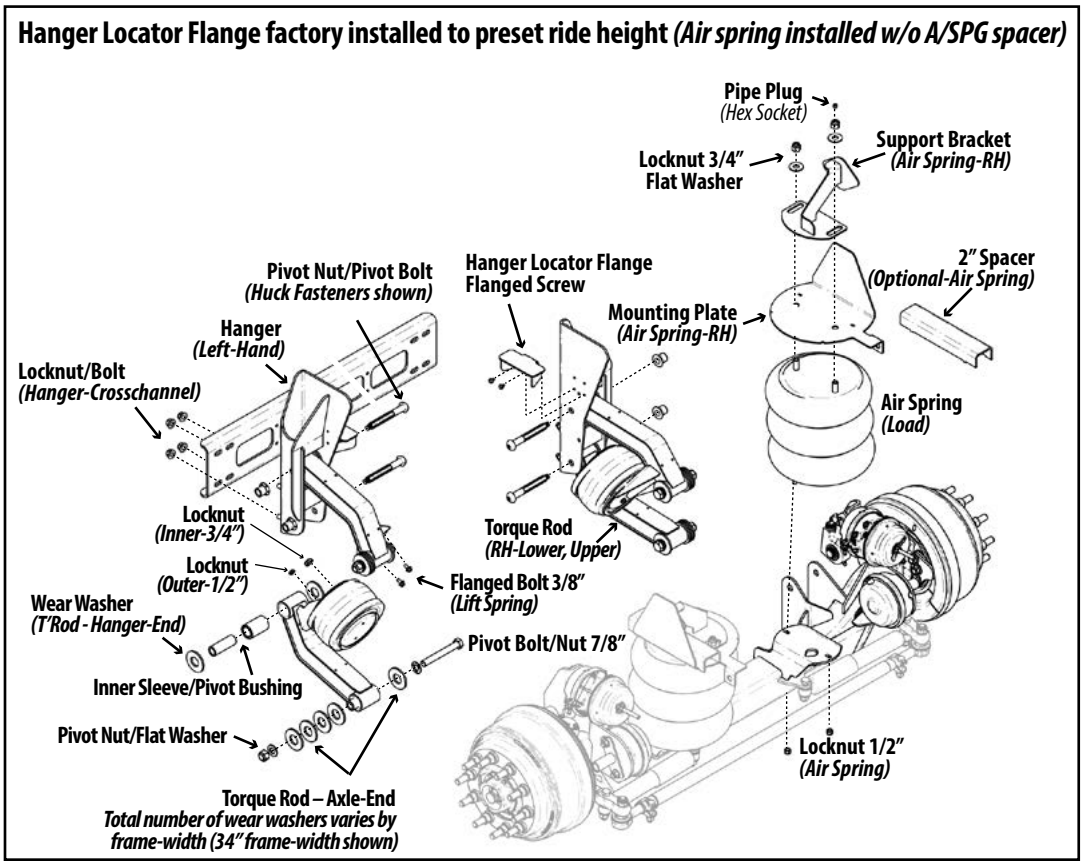


**Figure 4.**
**233-20K Truck Suspension Components-Drum Brake Axle**

**Refer to the engineering drawing for individual component part number.**

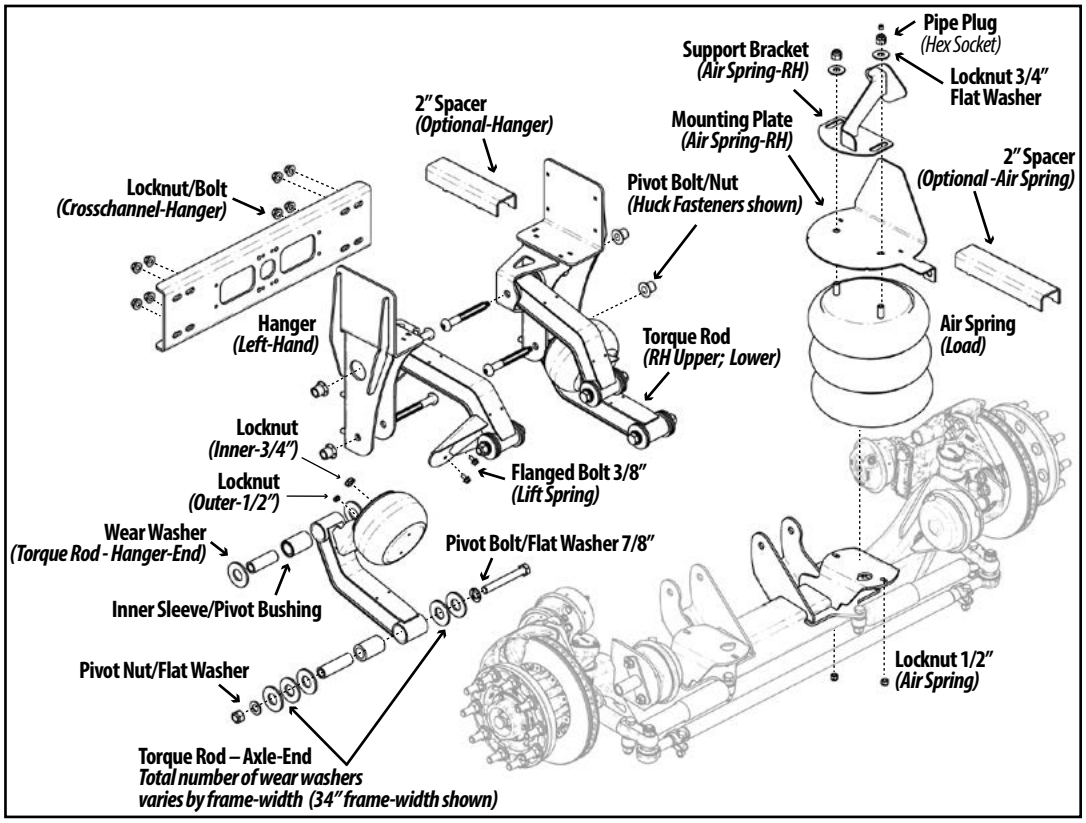


**Figure 5.**
**233-20K Truck Suspension Components-Disc Brake Axle**

**Refer to the engineering drawing for individual component part number.**

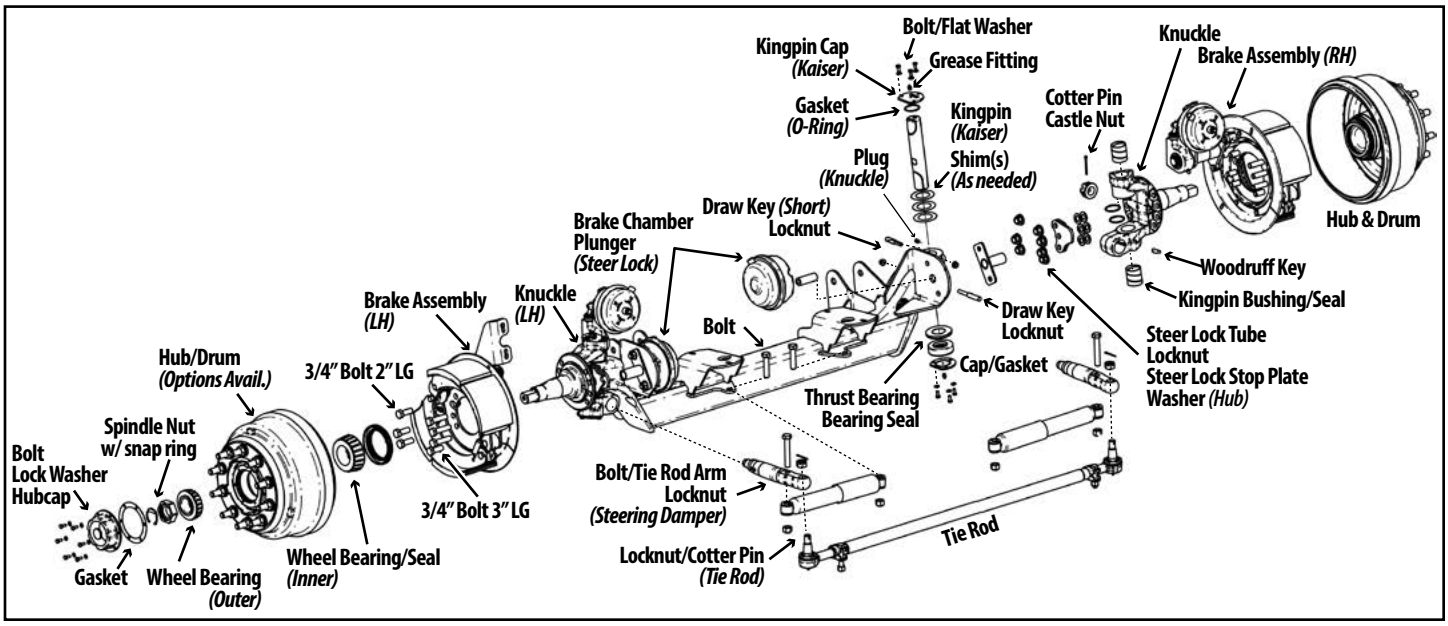


**Figure 6.**
**Drum Brake Fabricated Axle Assembly (Steer Lock; Westport Knuckle; Kaiser Kingpin)**
***(Reference only. Drum brake fabricated axle can be configured with a Standard Kingpin. Refer to engineering drawing for the individual component part numbers.)***

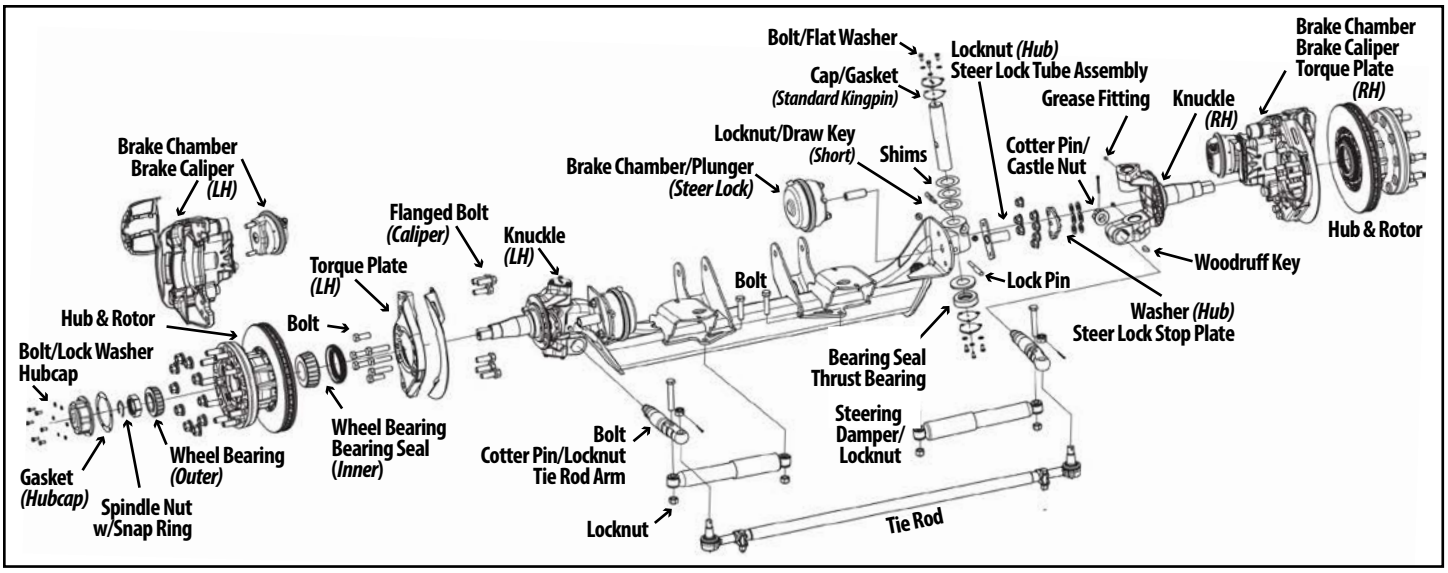


**Figure 7.**
**Disc Brake Axle Assembly(Steer Lock; Westport Knuckle; Standard Kingpin)**
***(Reference only. Disc brake fabricated axle can be configured with a Kaiser Kingpin. Refer to engineering drawing for the individual component part numbers.)***

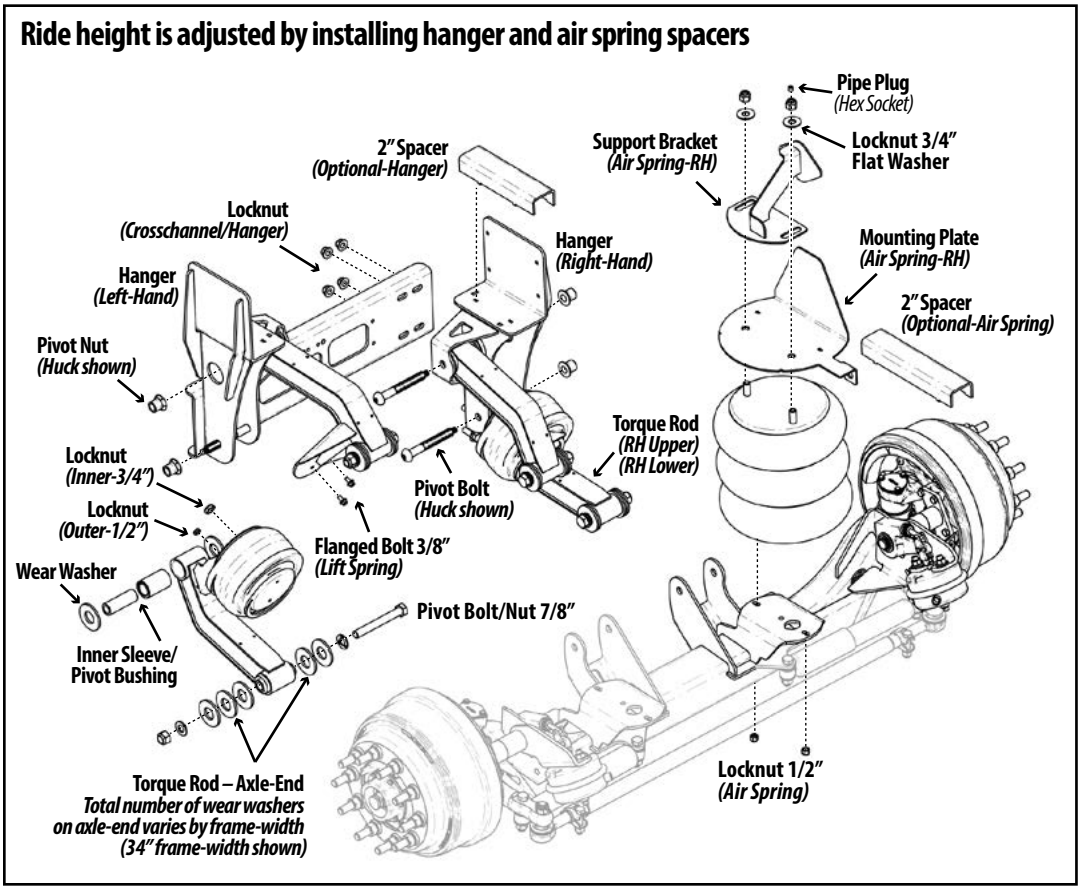


**Figure 8.**
**233-20K Roll-Off Truck w/ Drum Brake Axle Suspension Components**

**Refer to the engineering drawing for individual component part number.**

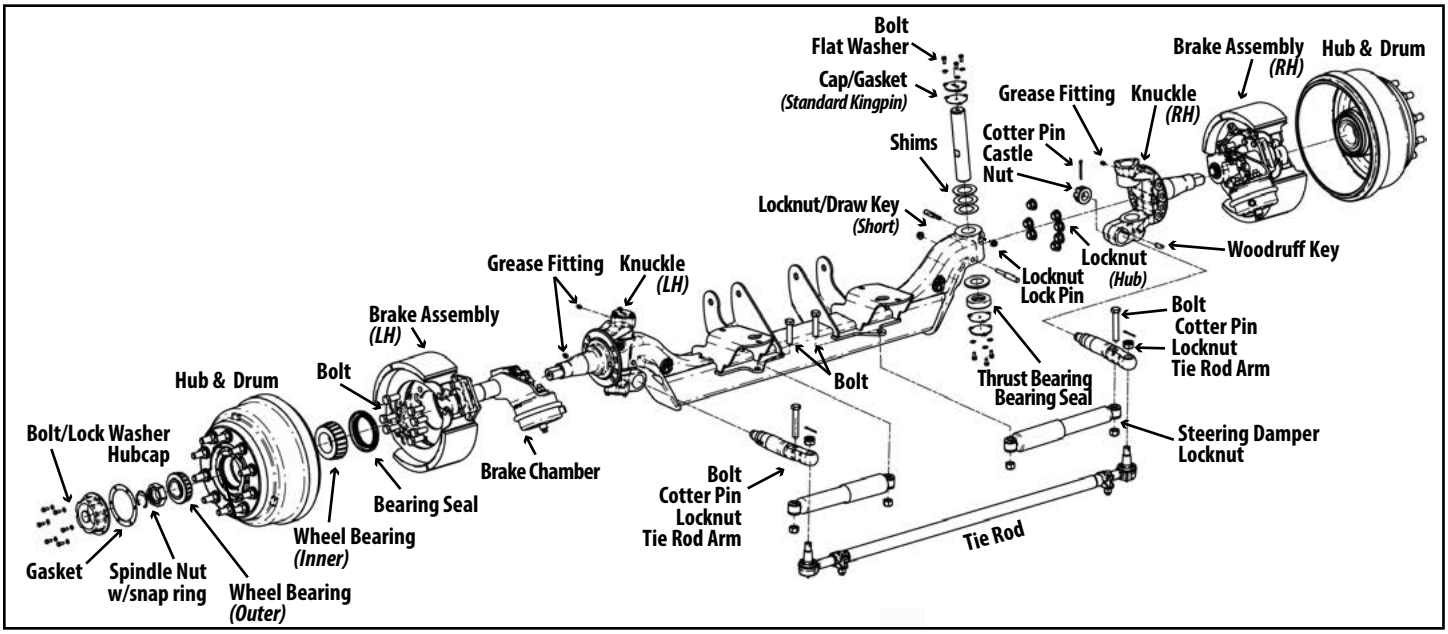


**Figure 9.**
**Roll-Off Truck - Drum Brake Fabricated Axle Assembly (Standard Kingpin).**
***(Reference only. Drum brake fabricated axle for 20K Roll-Off Truck Suspension can be configured with a Kaiser Kingpin. Refer to engineering drawing for the individual component part numbers.)***

| 233-20K Truck Suspension (Bushing Replacement Kit/Torque Specifications) | | | | |
|---|---|---|---|---|
| **Part Number (Component)** | **Item Description** | **Size** | **Torque Values foot-pound** | **Newton-meter** |
| **6040145 - Bushing Kit** | Traditional Hardware (HHCS/Locknut) | 7/8″-14NF | 500 ft-lb | 678 N-m |
| **6040142 - Bushing Kit** | No Pivot Hardware | | | |
| **Fasteners** | Locknut - (Air Spring; Upper) | 3/4″-16NF | 50 ft-lb | 68 N-m |
| | Locknut - (Air Spring; Lower) | 1/2″-13NC | 25 ft-lb | 34 N-m |
| | Locknut - (Lift Spring; Outer) | 1/2″-20NF | 25 ft-lb | 34 N-m |
| | Locknut - (Lift Spring; Inner) | 3/4″-16NF | 50 ft-lb | 68 N-m |
| | Flanged Lock Screw - (Lift Spring) | 3/8″-16NC | 25 ft-lb | 35 N-m |
| | Locknut - (Tie Rod/Steering Damper) | 3/4″-10NC | 160 ft-lb | 217 N-m |
| | Locknut - (Crosschannel) | 5/8″-11NC | 160 ft-lb | 217 N-m |

*Torque values reflect a lubricated thread condition (Nuts are pre-lubed). Do not overtorque.*
CAUTION *Suspension is shipped with minimal torque applied to fasteners.All fasteners must be re-torqued after first 6,000 miles of operation. Failure to install and maintain fasteners at torque specifications could result in suspension failure and void the warranty.*

## Vehicle Preparation

Park the vehicle on a level surface. Chock wheels to keep vehicle from moving.

Exhaust all air from the air system. Disassemble suspension, if necessary, to reach pivot connections.

CAUTION Failure to properly chock wheels and completely exhaust the air system could allow vehicle movement that could result in serious injury.

## Bushing Replacement Procedure

1. Count the number of wear washers on each side of the bushing on the Axle-End Torque Rod Assembly. The wear washer number varies according to the frame-width set by the hangers (Figure 10).
2. Cut/grind away Huck® Collars at the hanger-end pivot connection. Take pivot connection apart. Discard pivot hardware. Discard wear washers.
3. Remove bushing assembly from torque rod and discard. Clean rod eye of debris/corrosion.
4. Remove traditional hardware at the axle-end pivot connection. Take pivot connection apart. Discard pivot hardware. Discard wear washers.
5. Remove bushing assembly from torque rod and discard. Clean rod eye of debris/corrosion.
6. Apply Energy Suspensions® Formula 5 Prelube to the bore (inside) of replacement bushings.
NOTE: Do not substitute - special urethane bushing lubricant included with bushing kit.

*continued on next page*

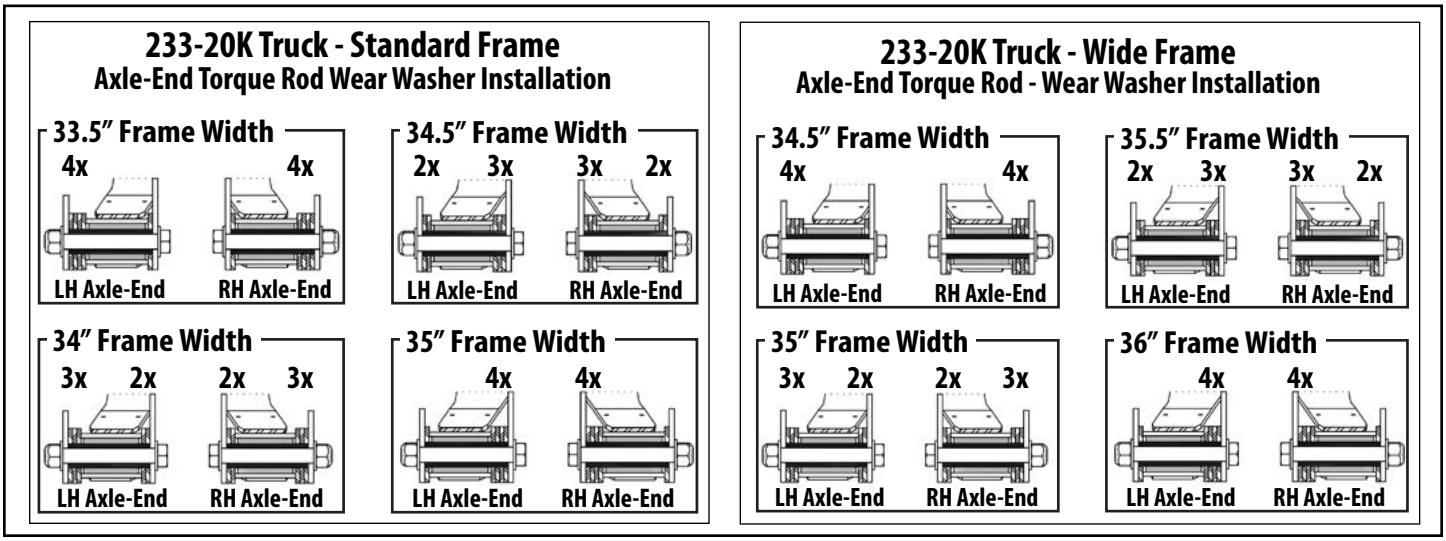


**Figure 10.**
**Refer to engineering drawing for the wear washers installed at the LH- and RH- axle-end pivot connection.**

7. Install new bushing into the eye of the torque rod. NOTE: Mallet /press needed to install bushing.
8. Hanger-End–Wear Washer Installation – (Bushing Sleeve - 4.1″)
   Press the inner sleeve into the installed bushing. Center sleeve so that both ends extend slightly past the sides of the bushing.
   Assemble the pivot connection with one wear washer on each side of bushing (Figure 11).
   Inner sleeve must be flush with or extend slightly past the outside of wear washers on both sides.
9. Axle-End–Wear Washer Installation – (Bushing Sleeve - 4.8″)
   Press the inner sleeve into the installed bushing. Position inner sleeve so that one end extends further past the bushing than the other end.
   Assemble pivot connection with the appropriate number of wear washers installed on both sides of the inner sleeve (Figure 11).
   Inner sleeve must be flush with or slightly past the outside of the wear washers on both sides.
10. Torque pivot nut to spec. (500 ft-lb - 678 N-m).
11. Reassemble suspension, if necessary. Torque components to specifications.
12. Verify wheel toe-in setting between 1/32″ and 3/32.″ Adjust if necessary (Page 5).

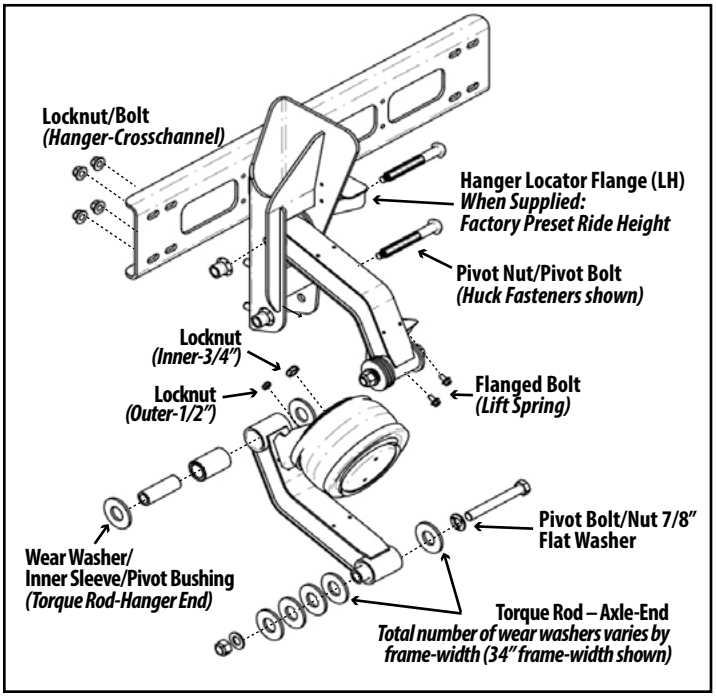


**Figure 11.**
**Bushing replacement kit includes wear washers and traditional hardware components to replace eight pivot connections.**

**Replace Huck™ fasteners at the hanger-end pivot connection with traditional hardware.**

**Refer to the engineering drawing to install the correct number of wear washers on the axle-end pivot connection of left-hand and right-hand torque rod.**

| Preplumbed Kit (Air Tank Integration) | | | | | | | |
|---|---|---|---|---|---|---|---|
| **(Part No.) Kit Components** | **(P/N) Includes Factory Installation** | **Item Description** | **Air Tank– 2200-Cu In** | **Pressure Protection Valve (PPV)** | **Brake Relay Valve** | **Lift Axle Control Module (LACM)** | **Quick Exhaust Valve (QE)** |
| **1200242** | **1200244** | **LACM Kit – Suspension w/ Drum Brakes**<br>*Assembly – valves; fittings and air lines from air springs to tank.* | 1230129 | 1230060 | 1230081 | 1230195 | |
| **1200246** | **1200247** | **Air Tank; Brake Relay Valve; Fittings**<br>*Assembly – Brake Relay Valve and fittings (No air lines).* | | | | | |
| **1200279** | **1200280** | **LACM Kit – Suspension w/ Disc Brakes**<br>*Assembly – valves; fittings and air lines from air springs to tank.* | 1230129 | 1230060 | 1230081 | 1230195 | |
| **1200283** | **1200284** | **Quick Exhaust Valve Kit–Suspension w/ Disc Brakes**<br>*Assembly – valves; fittings and air lines from air springs to tank.* | | | | | 1230078<br>*(2) valves needed* |

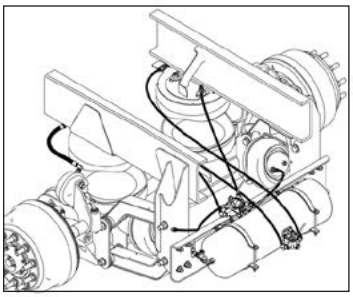

**Factory installation includes installing fittings to air tank components and air lines installed to air tank and air springs.**
***(Kit installation shown for reference only)***

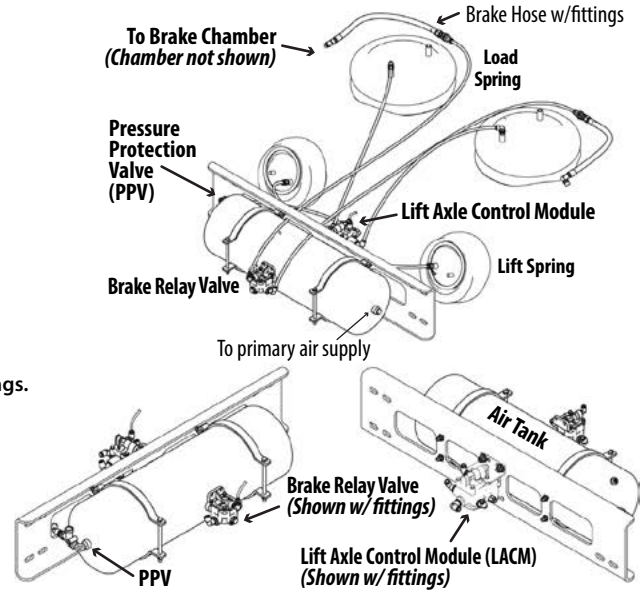


**Figure 12.**
**Preplumbed example – 1200242 Integration Kit 20K Truck w/ Drum Brake**

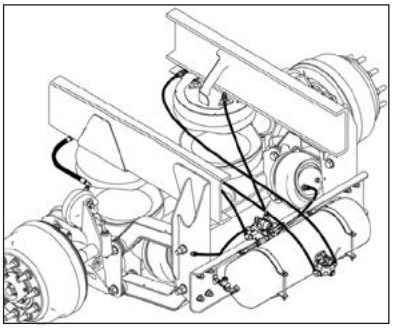

***Customer-furnished Lift Axle Control Module; pressure protection valve (PPV); and air lines shown for reference only***

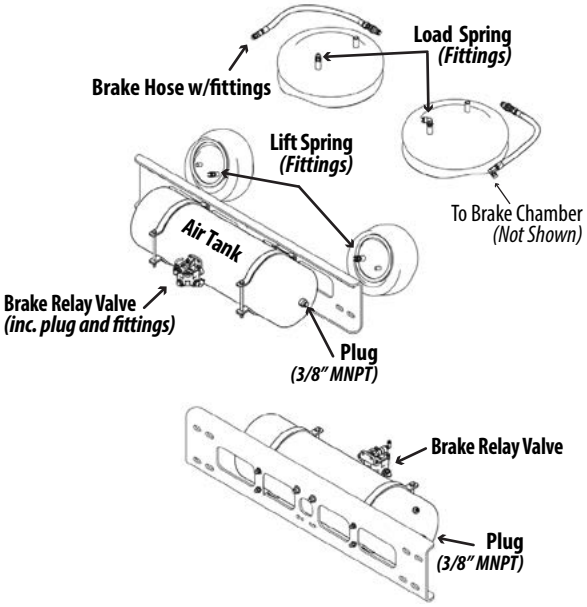


**Figure 13.**
**Preplumbed example – 1200246 Integration Kit: Air Tank; Brake Relay Valve and Fittings only**
***(No LACM; No PPV; No air lines)***

**Terms and coverage in this warranty apply only to the United States and Canada.**

Ridewell Suspensions warrants the suspension systems manufactured by it to be free of defects in material and workmanship. Warranty coverage applies only to suspensions that have been properly installed, maintained and operated within the rated capacity and recommended application of the suspension. The responsibility for warranty coverage is limited to the repair/replacement of suspension parts. The liability for coverage of purchased components is limited to the original warranty coverage extended by the manufacturer of the purchased part.

All work under warranty must have prior written approval from the Ridewell warranty department. Ridewell has the sole discretion and authority to approve or deny a claim and authorize the repair or replacement of suspension parts. All parts must be held until the warranty claim is closed.

Parts that need to be returned for warranty evaluation will be issued a Returned Materials Authorization (RMA). Parts must be returned to Ridewell with the transportation charges prepaid. The transportation charges will be reimbursed if the warranty claim is approved.

This non-transferable warranty is in lieu of all other expressed or implied warranties or representations, including any implied warranties of merchantability or fitness or any obligations on the part of Ridewell. Ridewell will not be liable for any business interruptions, loss of profits, personal injury, any costs of travel delays or for any other special, indirect, incidental or consequential losses, costs or damages.

**Contact the Ridewell Warranty Dept. at 417.833.4565 - Ext. 135, for complete warranty information.**