SERIES 6 3 0 0 A A A A 0 0 – A A

	CUSTOMER	DRAWING/ INSTRUCTIONS	PN SHOWN ON PACKAGE
(BLANK) =	(NOT SPECIFIC)	RIDEWELL STD	RIDEWELL PN
–AA =	TWO DIGIT CODES ARE CUSTOMER SPECIFIC. SEE BPCS ITEM NOTES FOR PACKAGING INFO.		

PACKAGING

FIGURE 1: HEIGHT CONTROL VALVE

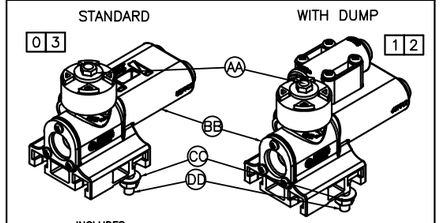

INCLUDES:

ITEM	QTY	PN	ITEM
AA	1	1130021	LEVER MOUNTING SCREW
BB	1	SEE CHART	HCV
CC	2	1157740B101	NUT 1/4" FLANGED
DD	2	1130020	T–BOLT 1/4"

HEIGHT CONTROL VALVE (FIG 1)

ITEM BB	VALVE	VALVE NO	REF. ⚠ KIT NO
0 =	HCV, STANDARD	6205004	6255004
1 =	HCV, PRESSURE DUMP	6205005	6255005
2 =	HCV, ZERO PRESSURE DUMP	6205006	6255006
3 =	HCV, LO–FLO	6205007	6255007
9 =	NO HCV		

FIGURE 2: PPV

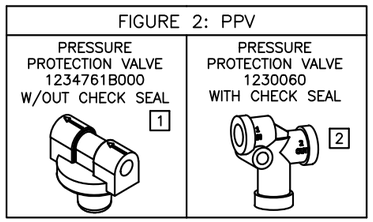

PRESSURE PROTECTION VALVE (FIG 2)

	ITEM	PART NO
0 =	(NONE)	–
1 =	PRESSURE PROTECTION VALVE	1234761B000
2 =	PPV WITH CHECK SEAL	1230060

FIGURE 3: LEVER

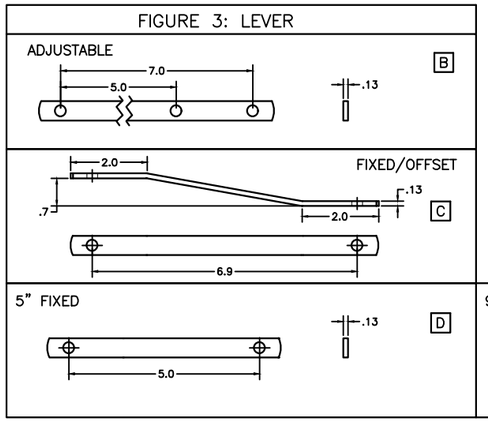

LEVER (FIG 3)

	LEVER	LENGTH	PART NO
A =	(NONE)	–	–
B =	ADJUSTABLE	5.0"/7.0"	6212001
C =	FIXED/OFFSET	6.9"	6212002
D =	FIXED	5.0"	6212003
E =	FIXED	9.0"	6212005

FIGURE 4: VERTICAL LINK

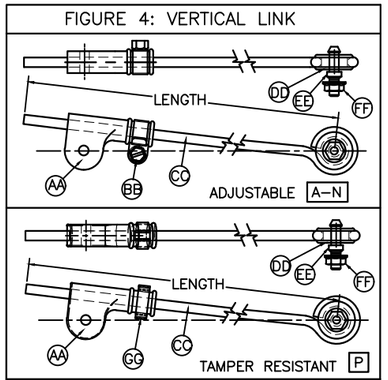

INCLUDES:

ITEM	QTY	PN	ITEM
AA	1	1235555B001	P–CONNECTOR
BB	1	1236478B000	CLAMP
CC	1	SEE CHART	VERTICAL LINK
DD	1	1237423B014	GROMMET
EE	1	1237740B001	UPPER PIN
FF	1	1157740B101	NUT, 1/4" FLANGED
GG	1	1350018	CRIMP CLAMP

NOTE: CRIMPING TOOL REQD. FOR ITEM GG

VERTICAL LINK (FIG 4)

	LENGTH	CLAMP TYPE	VERTICAL LINK ITEM CC	REF. ⚠ KIT NO
A =	(NONE)		–	–
B =	5.50"	BB	1237423B050	6210010
C =	9.00"	BB	1237423B049	6210011
D =	10.50"	BB	1237423B018	6210012
E =	12.00"	BB	1237423B045	6210013
F =	14.00"	BB	1237423B015	6210014
G =	15.00"	BB	1237423B044	6210015
H =	16.00"	BB	1237423B017	6210016
J =	18.00"	BB	1237423B016	6210017
K =	19.90"	BB	1237423B019	6210018
L =	21.00"	BB	1237423B043	6210019
M =	7.00"	BB	1237423B051	6210020
N =	25.00"	BB	1237423B020	6210021
P =	15.00"	GG	1237423B044	6210022

RESERVED

FITTINGS (FIG 7)

	ITEM	1/4"ELBOW	3/8"ELBOW	1/4"PLUG	3/8"PLUG	REDUCER	ADAPTER
		QUANTITY					
0 =	(NONE)	–	–	–	–	–	–
1 =	STEM ELBOW 3/8"	0	1	0	0	0	0
2 =	STEM ELBOW 3/8"	0	2	0	0	0	0
3 =	PLUG 3/8"	0	0	0	1	0	0
4 =	STEM ELBOW & PLUG 3/8"	0	1	0	1	0	0
5 =	PLUG 1/4"	0	0	1	0	0	0
6 =	REDUCER	0	0	0	0	3	0
7 =	REDUCER	0	0	0	0	1	0
8 =	STEM ADAPTER	0	0	0	0	0	3
9 =	STEM ADAPTER	0	0	0	0	0	4
A =	REDUCER & PLUG 3/8"	0	0	0	1	1	0
B =	UNIVERSAL	0	2	0	1	3	3
C =	STEM ELBOW 1/4"	2	0	0	0	0	0
D =	STEM ELBOW 3/8"	0	3	0	0	0	0

FIGURE 7: MISC

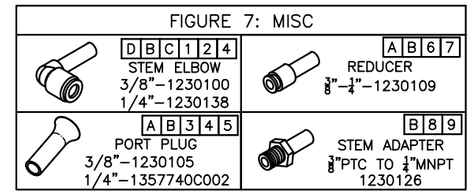

MOUNTING BRACKET (FIG 6)

	ITEM	BRACKET KIT NO
0 =	(NONE)	–
1 =	UNIVERSAL	1237423B010
2 =	J–BRACKET	6213001 ⚠
3 =	SHOCK MNT	7001087 Ⓤ
4 =	–	–
5 =	INTRAXX NT	8002011
6 =	SHK MNT OFFSET	8002852 Ⓤ

FIGURE 6: MOUNTING BRACKET

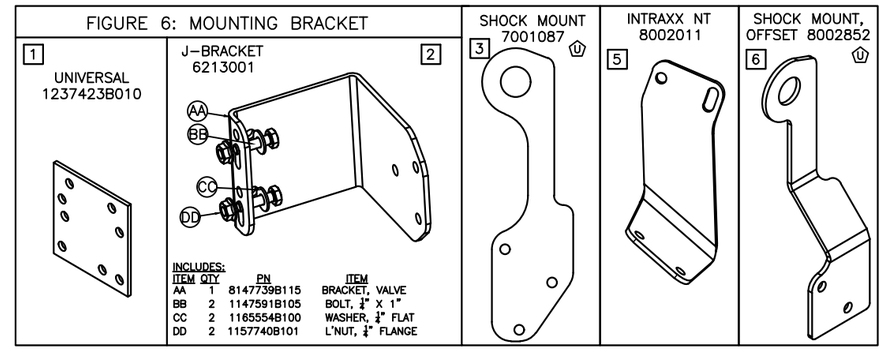

INCLUDES:

ITEM	QTY	PN	ITEM
AA	1	8147739B115	BRACKET, VALVE
BB	2	1147591B105	BOLT, 1/4" X 1"
CC	2	1165554B100	WASHER, 1/4" FLAT
DD	2	1157740B101	L'NUT, 1/4" FLANGE

LOWER PIN ASSEMBLY (FIG 5)

	PIN ASSEMBLY TYPE	OA LENGTH	THREAD LENGTH	EFFECTIVE LENGTH	LOWER PIN ITEM AA	REF ⚠ KIT NO
A =	(NONE)	–	–	–	–	–
B =	VERTICAL MOUNT, 5/16"	2.50"	1.13"	1.00"	1237423B003	6211010
C =	VERTICAL MOUNT, 5/16"	2.00"	1.00"	.75"	1237423B013	6211011
D =	VERTICAL MOUNT, 5/16"	4.25"	1.88"	2.50"	1237423B102	6211012
J =	VERT MNT, CLAMP, 5/16"5.00"	2.50"	1.13"	1.00"	1237423B003	6211013
K =	VERT MNT. CLAMP, 5/16"5.75"	2.50"	1.13"	1.00"	1237423B003	6211014
E =	VERTICAL MOUNT, 1/4"	2.50"	1.13"	1.00"	1237423B008	6211110
F =	HORIZONTAL MOUNT, 5/16"	2.68"	1.88"	1.25"	1237423B002	6211210
G =	HORIZONTAL MNT&BKT, 5/16"	2.68"	1.88"	1.25"	1237423B002	6211211
H =	INTRAXX MOUNT, 1/4"	2.50"	1.13"	1.00"	1237523B008	6211111

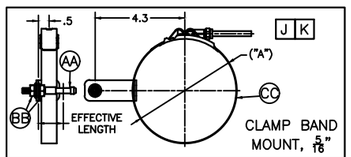

ITEM No.	PART No.	PART DESCRIPTION	DIM. "A"	No. REQD. (J) 6211013	No. REQD. (K) 6211014
AA	1237423B003	LOWER PIN		1	1
BB	1150026	NUT, 5/16 FLANGE		2	2
CC	1350101	CLAMP BAND 5.00"	(5.00)		1
	1350102	CLAMP BAND 5.75"	(5.75)	1	

FIGURE 5: LOWER PIN ASSEMBLY

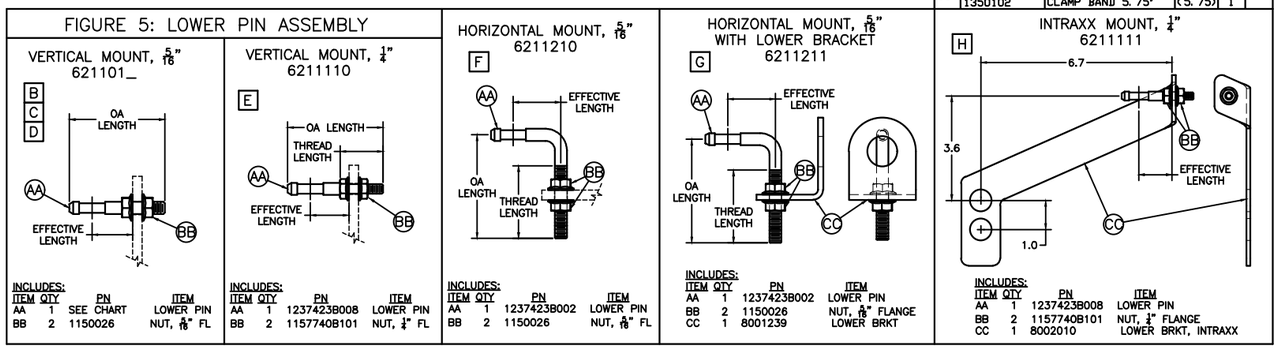

INCLUDES:

ITEM	QTY	PN	ITEM
AA	1	SEE CHART	LOWER PIN
BB	2	1150026	NUT, 5/16" FL

INCLUDES:

ITEM	QTY	PN	ITEM
AA	1	1237423B008	LOWER PIN
BB	2	1157740B101	NUT, 1/4" FL

INCLUDES:

ITEM	QTY	PN	ITEM
AA	1	1237423B002	LOWER PIN
BB	2	1150026	NUT, 5/16" FL

INCLUDES:

ITEM	QTY	PN	ITEM
AA	1	1237423B002	LOWER PIN
BB	2	1150026	NUT, 5/16" FLANGE
CC	1	8001239	LOWER BRKT

INCLUDES:

ITEM	QTY	PN	ITEM
AA	1	1237423B008	LOWER PIN
BB	2	1157740B101	NUT, 1/4" FLANGE
CC	1	8002010	LOWER BRKT, INTRAXX

⚠ KITS LISTED FOR REPLACEMENT PURPOSES ONLY

REV	ECN#	REVISION DESCRIPTION	DATE	BY	CHK	APPD
U	2156	REVISED MOUTING BRACKET 3, 6	1/14/21	CAG	GWH	PMB
T	19104	KIT BOMS MOVED TO TOP LEVEL, KIT LEVEL MADE REF	02/14/20	PMB	AAS	BB
S	B199	PIN ASSY TYPE "D" LOWER PIN (ITEM AA) WAS 1237423B802	8/9/19	AAS	GWH	PMB
R	15100	UPDATED 7001087 GRAPHIC (FIGURE 6–3)	4/20/15	PMB	MDJ	PMB
P	09100	CHANGED HCV KITS (3RD CHARACTER) TO VALVE W/OUT A CHECK SEAL	6/21/10	G.H.	MDJ	DK
N	09100	ADDED 1 ELBOW TO FIG 7, ADDED 9" LEVER	11/10/09	DK	MDJ	DK
M	09100	ADDED MOUTING BRACKET 6, REMOVED 4	3/5/08	G.H.	MDJ	DK
L	08100	ADDED B, C, & D TO FIG 7	3/5/08	G.H.	MDJ	DK

This drawing and/or electronic media containing this drawing is the sole property of the Ridewell Corp. and is loaned with the express condition that it is not to be used in any way deleterious to the interest of the Ridewell Corp. The acceptance of this drawing and/or electronic media containing this drawing will be construed as an acceptance of the foregoing conditions. Drawings and/or electronic media containing this drawing are to be returned to the Ridewell Corp. upon request.

DRAWN BY:	DK	2/23/06
CHECKED:	BB	2/28/06
APPROVED:	BB	2/28/06

PROJECT NO: 05112
SCALE: B–SIZE: NTS D–SIZE: NTS
MATERIAL: –
WEIGHT: –

TOLERANCES UNLESS OTHERWISE SPECIFIED:
DECIMAL: .X ±0.1 .XX ±0.06 .XXX ±0.030
FRAC: ±1/16 ANG: X ±1° XXX KCC
*WELD TOLERANCES PER ISO W045–02

RIDEWELL CORPORATION
PO BOX 4586 SPRINGFIELD, MISSOURI 65808

TITLE: HEIGHT CONTROL KITS

CHARTED

SHEET 1 OF 1

PART NO: 6300AAAA00

REV: U