RAR-240 Hanger Mount – Bushing Replacement Procedure

Part Number (Component)	Item Description	Size	Torque Values foot-pound	Torque Values Newton-meter
6040029 – Bushing Kit 15K U/S (2400080) and 25K U/S; O/S	Pivot Hardware– Eccentric Bolt/Locknut	1 1/4″-7NC	1000 ft-lb	1350 N-m
6040028 – Bushing Kit 30K U/S; O/S	Pivot Hardware– Eccentric Bolt/Locknut	1 1/4″-7NC	1000 ft-lb	1350 N-m
6040071 – Bushing Kit 25K O/S - Tanker Special	Pivot Hardware– Eccentric Bolt/Locknut	1 1/4″-7NC	1000 ft-lb	1350 N-m
6040091 – Bushing Kit 30K O/S - Tanker Special	Pivot Hardware– Eccentric Bolt/Locknut	1 1/4″-7NC	1000 ft-lb	1350 N-m
6047680B060 – Bushing Kit 25K/30K U/S; O/S Manuf. pre-1995	Pivot Hardware– Eccentric Bolt/Locknut	1 1/4″-7NC	1000 ft-lb	1350 N-m
Fasteners	Bolt (Air Spring, Lower)	1/2″-13NC	25 ft-lb	35 N-m
	Nut (Air Spring, Upper)	3/4″-16NF	50 ft-lb	70 N-m
	Locknut (Shock Absorber)	3/4″-10NC	200 ft-lb	270 N-m

Torque values reflect a lubricated thread condition (Nuts are pre-lubed). Do not overtorque.

CAUTION *Suspension is shipped with minimal torque applied to fasteners.All fasteners must be re-torqued after first 6,000 miles of operation. Failure to install and maintain fasteners at torque specifications could result in suspension failure and void the warranty.*

Vehicle Preparation

Park vehicle on a level surface. Chock wheels.

Raise vehicle to height that removes load from suspension. Support with jack stands.

Disconnect linkage from the height control valve(s), if necessary, and exhaust all air from the air springs.

CAUTION Failure to properly chock the wheels, exhaust air system and raise and safely support the vehicle could allow vehicle movement that could result in serious injury.

Disassemble Suspension

1. Remove pivot nut. Remove anti-turn washer from bolt by grinding away welds. Locate arrow on bolt head. Turn bolt head until arrow points straight up. Remove bolt.
2. Rotate beam out of hanger. Inspect pivot-bolt hole and hanger surfaces for wear or damage. Repair or replace components as needed.

Notes and Cautions

This instruction uses two types of service notes:

"NOTE": Provides additional instructions or procedures to complete tasks and make sure that the suspension functions properly.

CAUTION Indicates a hazardous situation or unsafe practice that, if not avoided, could result in equipment damage and serious injury.

Bushing Removal and Installation

1. Remove Huck® fasteners from bushing clamp (Fig 1). Separate clamp and remove bushing assembly.
2. Insert bushing assembly into bushing clamp. Install replacement bolts, washers and nuts.
3. Center bushing assembly. Torque nuts to 190 ft-lb.
4. Verify bushing clamp surfaces are closed "metal-to-metal". Torque nuts to 280 ft-lb (380 N-m).

Figure 1.

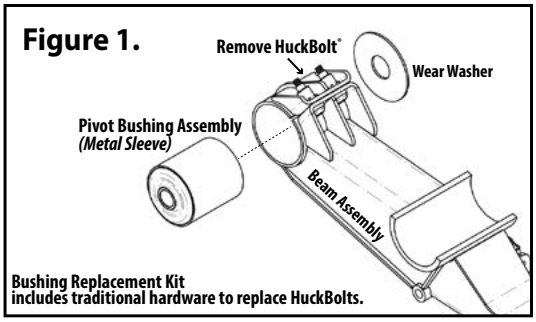

Reassemble Suspension

1. Rotate beams into hangers. Install new wear washer on inboard side of the beams.
   CAUTION Tanker Special/Yoke Mount suspension requires two wear washers on inboard/outboard beam sides.
2. Coat the large diameter shank of the eccentric bolt with anti-seize compound. Locate arrow on the bolt-head; install bolt with arrow-head pointing straight up.
3. Align axle if necessary (Page 3).
   Weld the anti-turn washers over eccentric-bolt head with 1/4″ fillet welds at bolt-head top and bottom. Verify suspension ride height. Torque pivot nut to 1,000 ft-lb (1,350 N-m).
4. Install shock absorbers. Install wheels and tires (if removed).
5. Raise the vehicle and remove support stands. Lower the vehicle to the ground.
6. Connect height control valve linkage, if necessary, and adjust to the installed ride height.

RAR-240 Yoke Mount – Bushing Replacement Procedure				
Part Number (Component)	**Item Description**	**Size**	**Torque Values** foot-pound	Newton-meter
6040011 – Bushing Kit	Pivot Hardware (Eccentric Bolt/Locknut)	1 1/4″-7NC	1000 ft-lb	1350 N-m
Fasteners	Bolt (Air Spring, Lower)	1/2″-13NC	25 ft-lb	35 N-m
	Locknut (Air Spring, Upper)	3/4″-16NF	50 ft-lb	70 N-m
	Bolt/Locknut (Shock Absorber)	3/4″-10NC	200 ft-lb	270 N-m

Torque values reflect a lubricated thread condition (Nuts are pre-lubed). Do not overtorque.
CAUTION *Suspension is shipped with minimal torque applied to fasteners.All fasteners must be re-torqued after first 6,000 miles of operation. Failure to install and maintain fasteners at torque specifications could result in suspension failure and void the warranty.*

Vehicle Preparation

Park the vehicle on a level surface. Chock wheels to keep vehicle from moving.

Raise vehicle to height that removes load from suspension and support with jack stands.

Disconnect linkage from height control valve(s), if necessary. Exhaust all air from the system.

Remove the wheels and tires if necessary. Remove shock absorbers.

CAUTION Failure to properly chock wheels, exhaust the air system and support the vehicle could allow vehicle movement that could result in serious injury.

Disassemble Suspension

1. Remove pivot nuts. Remove the anti-turn washers from the eccentric bolt (pivot bolt) heads by grinding away the welds.
2. Locate the arrow on the eccentric bolt head. Turn bolt head until the arrow points straight up and remove bolt.
3. Rotate beams down and away from frame. Inspect the trailing arm pivot bolt holes and wear washers for unusual wear or damage. Repair or replace components as needed.

Figure 2.

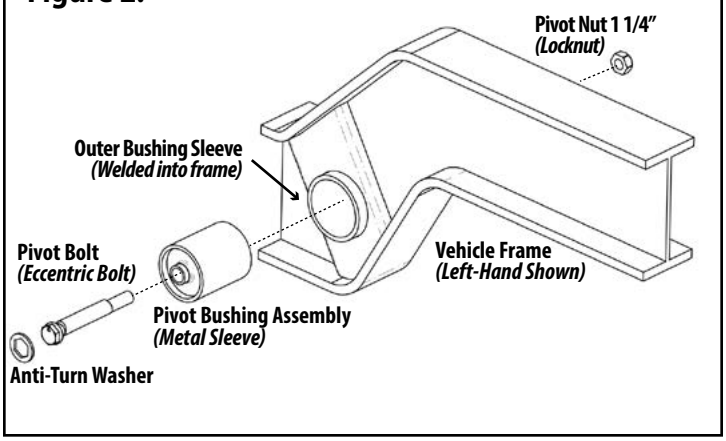

Bushing Removal and Installation

1. Remove the pivot bushing assembly from the bushing sleeve welded to the frame by grinding away the four (4) welds on each side of the sleeve.
2. Position (center) replacement bushing assembly into the outer bushing sleeve (Figure 11).
3. Attach bushing assembly with four one-inch welds on each side.
   3.1. Welds should be staggered and the steel allowed to cool between welds.
   3.2. Weld the top of bushing sleeve at outboard side of frame, then the bottom of the sleeve at the inboard side of frame and move the welds around the sleeve in 90^0 increments.
   CAUTION Excessive heat and distortion can damage the bond between the rubber bushing and steel sleeve of the bushing assembly.

Reassemble suspension

Rotate trailing arm beams onto the frame. Install new wear washers on both the inboard and outboard side of the bushing assembly.

Coat the large diameter shank of the eccentric bolts with anti-seize compound. Locate arrow on bolts. Install bolts with the arrows pointing straight up.

Align the axle, if necessary (Page 3).

Weld anti-turn washers over eccentric bolt heads with 1/4″ fillet welds at top and bottom of bolt head. With the suspension at ride height, torque pivot nut to 1,000 ft-lb (1,350 N-m).

Install shock absorbers.

Install wheels and tires (if removed). Raise vehicle and remove support stands. Lower vehicle to ground.

Connect height control valve linkage, if necessary, and adjust ride height.

CAUTION Failure to properly torque pivot hardware could result in suspension failure/void the warranty.

Axle Alignment

Alignment should be performed on a level surface with the suspension at the desired ride height. Refer to the engineering drawing for the designed ride heights of the suspension model.

Align the suspension per TMC or SAE recommended standards. On a multiple-axle vehicle, the forward axle is moved into the proper alignment, then the remaining axles are positioned so that they are parallel to the forward axle.

A maximum tolerance of 1/8-inch difference from side-to-side of the forward axle and 1/16-inch difference from side-to-side for the aft axles is acceptable (Figure 3).

Figure 3.
Kingpin measurement for axle alignment

Check forward axle alignment by measuring from kingpin to both ends of the axle centers.

If the difference between the "A" measurement and the "B" measurement is greater than 1/8-inch, the forward axle needs to be aligned.

Adjust the aft axle if difference between the "C" and the "D" measurement is greater than 1/16-inch.

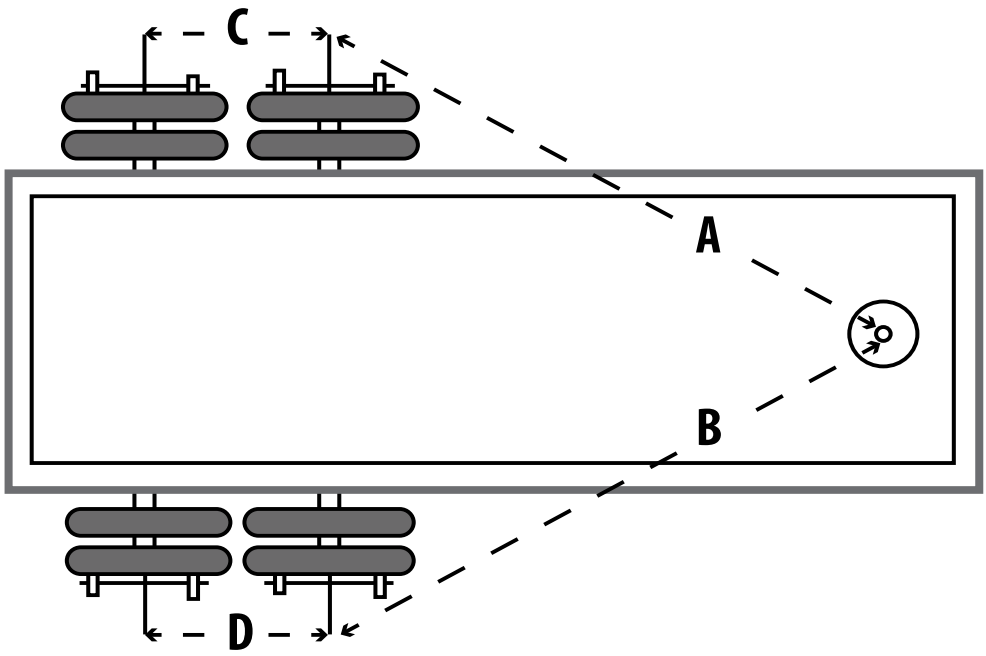

Axle Alignment Procedure

Loosen the pivot nut enough for the beam to move. NOTE: If installed, remove the anti-turn washer by grinding away the welds.

Turn bolt head until arrow on bolt head points straight up (12 o'clock position).

Turn eccentric bolt to move beam forward or backward until axle reaches alignment.
CAUTION Do not turn arrow past the 9 o'clock or 3 o'clock position (horizontal).

Weld anti-turn washer over bolt head with 1/4" fillet welds at top and bottom (Figure 4).

Torque pivot nut to 1,000 ft-lb (1,350 N-m).

CAUTION Failure to properly torque pivot hardware could result in suspension failure/void the warranty.

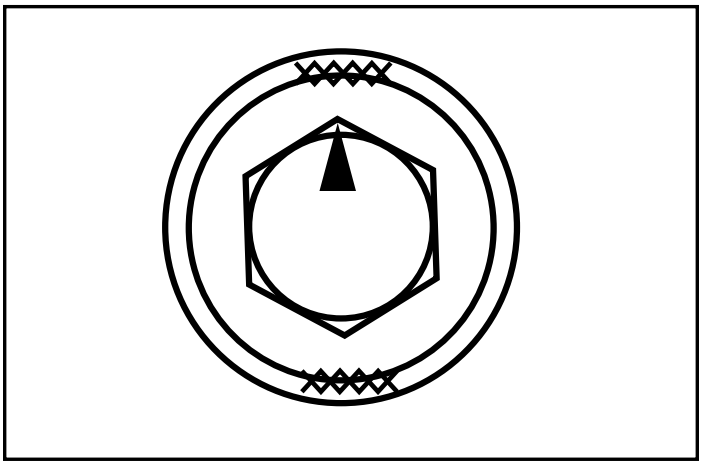

Figure 4.
Secure anti-turn washer with 1/4" fillet welds before applying final torque to pivot nut.