PRIMARY TRAILER AXLE APPLICATIONS AND PARTS GUIDE

Ridewell-Branded Axles – General Information

Base Axle/Suspension Model – ID Tags ---------- 2
165xxxx (Base-Axle P/N) Service Parts– Page Locator ---------- 3
164xxxx (Dressed-Axle Part Number) – Part Number Decoder/Glossary ---------- 4
Axle Beam Rating – 5” Standard; 5 3/4” Large Diameter Axle (LDA) ---------- 5
Axle Track Dimensions
Single-Wheel; Dual-Wheel ---------- 6
Wide-Base Wheel Configuration ---------- 7

Service Parts – Drum Brake Axle

16.5” x 7.0” Brake Size
Long Cam – Without Cam Enclosure ---------- 8
Long Cam – With Cam Enclosure ---------- 9
Short Cam – With Cam Enclosure ---------- 10
Brake Chamber/Slack Adjuster Components ---------- 11
Hub and Drum Components ---------- 12
12.25” x 7.5” Brake Size
Long Cam – Without Cam Enclosure ---------- 13
Brake Shoes/Dust Shield/Anti-Lock Brake System (ABS) ---------- 14

Service Parts – Air Disc Brake (ADB) Axle

22.5” Wheel Size – Wabco Caliper (Discontinued) ---------- 15
22.5” Wheel Size – Wabco; Haldex; Bendix Caliper ---------- 16
Hub and Rotor; Wheel-End Components ---------- 17
19.5” Wheel Size – Wabco Caliper ---------- 18
Hub and Rotor; Wheel-End Components ---------- 19
17.5” Wheel Size – Wabco Caliper ---------- 20
Caliper Parts (Wabco; Bendix; Haldex) ---------- 21
Caliper/Wheel Rotation (ADB Axles) ---------- 22

Service Parts – Bent-Tube Axle (165- Base Axle)

Air Disc Brake Axle – (P) Spindle ---------- 23
Drum Brake Axle – (N) Tapered Spindle; Short Brake Cam w/ Cover ---------- 24
Long Brake Cam w/o Cover ---------- 25

Common Axle/Wheel-End Components

Wheel Bearing/Wheel Seal ---------- 26
Spindle Nut/Wheel Nut ---------- 27
Q+ Brake Cams – 16.5” x 7.0” Brake Size ---------- 28
Hubcap Options ---------- 29
Automatic Tire Inflation System (ATIS) Axle Preparation/Components ---------- 30

Maintenance

Preventive Maintenance ---------- 31
Brake-Cam/Wheel-End Lubrication ---------- 32
Wheel-Bearing Adjustment Procedure ---------- 33
Drum Brake Chamber – Mounting Pattern; Cam Rotation ---------- 34
ADB Chamber – Port Orientation (By Brake Chamber Part Number) ---------- 35
Torque Specifications – Axle/Wheel-End Components ---------- 36
Drum Brake Axle – Cam Enclosure Replacement Procedure ---------- 37-38

Warranty ---------- 40

RIDEWELL SUSPENSIONS

MODEL:		PART NO.	
SERIAL NO.		CAPACITY	TON

Axle-Body Identification Tag

The **Base-Axle Part Number (165xxxx)** as well as the **Serial Number** of Ridewell-branded round axle tubes is listed on the **Axle-Body Serial Identification Tag**.

The ID Tag is found on both Straight- and Bent-Tube Axles with a Parallel (P) or Tapered (N) spindle attached to the axle-end.

The **Base-Axle Part Number** applies to both 5-inch "Standard" Axles or 5 3/4-inch "Large Diameter Axles (LDA)"configured for Drum Brake/Air Disc Brake (ADB) braking systems.

Brake chambers; Anti-Lock Braking Systems (ABS); and, other wheel-end equipment components are installed onto Ridewell-Branded Base-Axles to create the **164xxxx (Dressed-Axle) Part Number** (See page 4).

RIDEWELL SUSPENSIONS
The Engineered Suspension Company

PART NO:
SUSP. NO:
SERIAL NO:

GROSS AXLE WEIGHT RATING CERTIFICATION IS PER THE FINAL STAGE MANUFACTURER OR ALTERER.

THIS PRODUCT MAY BE COVERED UNDER ONE OR MORE PATENTS, ADDITIONAL PATENTS MAY BE PENDING.

www.ridewellcorp.com **(800) 641-4122**

Suspension Model Serial Identification Tag

The **Part Number** is listed on the Suspension ID tag as the **(606-) Installation/Assembly Number** when axles and other components are factory installed.

The **Suspension Number** and **Serial Number** on refer to the suspension model and the date of manufacture of the individual suspension system.

Please refer to the suspension number/part number and serial number when contacting Ridewell for warranty and other customer service information.

Scan/click on the QR-Code to access further installation/ maintenance information on Ridewell suspension models and system components.

Online at www.ridewellcorp.com/installation-and-service

Straight-Axle/Bent-Tube Axle (165xxxx - Base-Axle Part Number) Service Parts – Page Location

Look for the **165xxxx Base Axle Part Number** in the chart. The Service Part Part Numbers for Ridewell-Branded Drum Brake/Air Disc Brake (ADB) Base-Axles are located on the page(s) listed.

Base-Axle Part No.	Page
1650035	8
1650036	8
1650051 (Bent-Tube; Drum)	25
1650053	8
1650054	8
1650055 (Bent-Tube; Drum)	25
1650056	9
1650057	8
1650058	9
1650058D	10
1650059	8
1650061	8
1650062	8
1650063	8
1650064	8
1650069-Δ	8
1650070	8
1650071	9
1650072	8
1650074	8
1650075	13
1650076	13
1650077	13
1650081 (Bent-Tube; Drum)	25
1650083 (Bent-Tube; Drum)	25
1650085	8
1650087	8
1650088	8
1650089	13
1650090	8
1650091	8
1650092	8
1650093	8
1650094	8
1650096-Δ	8
1650097-Δ	8
1650098	9
1650099	9
1650100	8
1650101	9
1650102	9
1650103-Δ	8
1650104-Δ	8
1650105-Δ	8
1650106-Δ	8
1650107-Δ	8
1650108-Δ	8
1650109	8
1650110	8
1650111	8

Base-Axle Part No.	Page
1650112	8
1650114	8
1650119	13
1650120	8
1650123	8
1650124 (Bent-Tube; Drum)	25
1650127	8
1650128	8
1650131	8
1650134	9
1650136	9
1650137 (Bent-Tube; Drum)	25
1650140	8
1650141	9
1650144-Δ	9
1650146	8
1650148-Δ	8
1650149	8
1650150	8
1650151	8
1650155	13
1650160	9
1650166	9
1650168	15
1650169	9
1650175	15
1650176	15
1650177	15
1650178	8
1650179	8
1650180	8
1650181	8
1650182	9
1650185-Δ	8
1650186	13
1650187	15
1650188	8
1650192-Δ	8
1650193	15
1650196-Δ	8
1650201-Δ	8
1650202	13
1650205	10
1650205D	10
1650206	10
1650206D	10
1650207	10
1650207D	10
1650213	15
1650214	8

Base-Axle Part No.	Page
1650215	9
1650216-Δ	8
1650217-Δ	9
1650218-Δ	9
1650219	9
1650222	15
1650227	13
1650228	15
1650229	15
1650234	15
1650235	15
1650236	15
1650237	15
1650239	8
1650240	16-17
1650241	16-17
1650245 (Bent-Tube; ADB)	25
1650246 (Bent-Tube; ADB)	25
1650251	10
1650251D	10
1650254	16-17
1650258	16-17
1650259	16-17
1650260	16-17
1650263 (Bent-Tube; Drum)	25
1650264-Δ	8
1650265	18-19
1650266	18-19
1650268	13
1650270D	10
1650271D	10
1650287 (Bent-Tube; Drum)	24
1650289	20
1650290	20
1650294	18-19
1650296D	10
1650297D	10
1650299	10
1650300	16-17
1650306	18-19
1650307	20
1650312	16-17
1650325	8
1650326D	10
1650335	10
1650341	16-17
1650342	8
1650343	8
1650347	10
1650348	16-17

Base-Axle Part No.	Page
1650351	16-17
1650352	9
1650353	9
1650358	8
1650359	16-17
1650360	16-17
1650362	16-17
1650364	8
1650365	9
1650366	9
1650367	9
1650368	9
1650369	9
1650370	9
1650371	9
1650372	9
1650373	9
1650377	10
1650378	10
1650380	16-17
1650381	10
1650388	8
1650389 (Bent-Tube; ADB)	23
1650393 (Bent-Tube; ADB)	23
1650395	15
1650396	15
1650397	15
1650398	15
1650400	16-17
1650401	8
1650402	16-17
1650415	10
1650418	16-17
1650428	10
1650432 (Bent-Tube; ADB)	23
1650435	16-17
1650436	13
1650437	13
1650438	18-19
1650442	18-19

Δ–Custom cam-length needed - Contact Ridewell Customer Service. Contact Customer Service if you have a 165- Base-Axle part number not listed in chart.

164xxxx (Dressed-Axle) Part Number Definitions

Track (Axle Track)

The distance between the centerline of two wheels mounted on each end of the axle.
The theoretical centerline of a dual steel-wheel configuration sets the axle track specification.

Camber (Optional)

Axle-camber is the inward or outward angle of mounted tires. Axles are cambered to bow the axle. Weight on the axle will bring the wheel camber to zero. Positive camber means the tire-top is farther apart than the bottom.
NOTE: Cambered axles should be installed with the center-bow up.

ABS Prep

Denotes how wheel-end components are prepared to install the Anti-Lock Braking System (ABS).

1. Wheel hub is prepared without installed tone ring.
2. Hub is prepped with installed tone ring
3. Both tone ring and ABS sensor are installed.

Spindle Type/Wall Thickness

The spindle on the axle end supports the wheel-end components (Figure 2).
The (P) Parallel Spindle extends out parallel to the axle-body.
The (N) Tapered Spindle is smaller than the axle-body at the axle end.

Wall thickness affects axle load capacity; thicker has higher capacity.

Brake Rating

The maximum stopping power of the drum or disc brake. Brake rating is dependent on the drum/disc brake type and size, type of brake pad/shoe lining, brake input power, the brake's structural rating and the tire static load radius.

The brake input power for cam/disc brakes includes air chamber size and slack adjuster length.

CAUTION The Brake Rating must not be over- or under-sized. Contact Ridewell Customer Service to confirm suspension application brake rating.

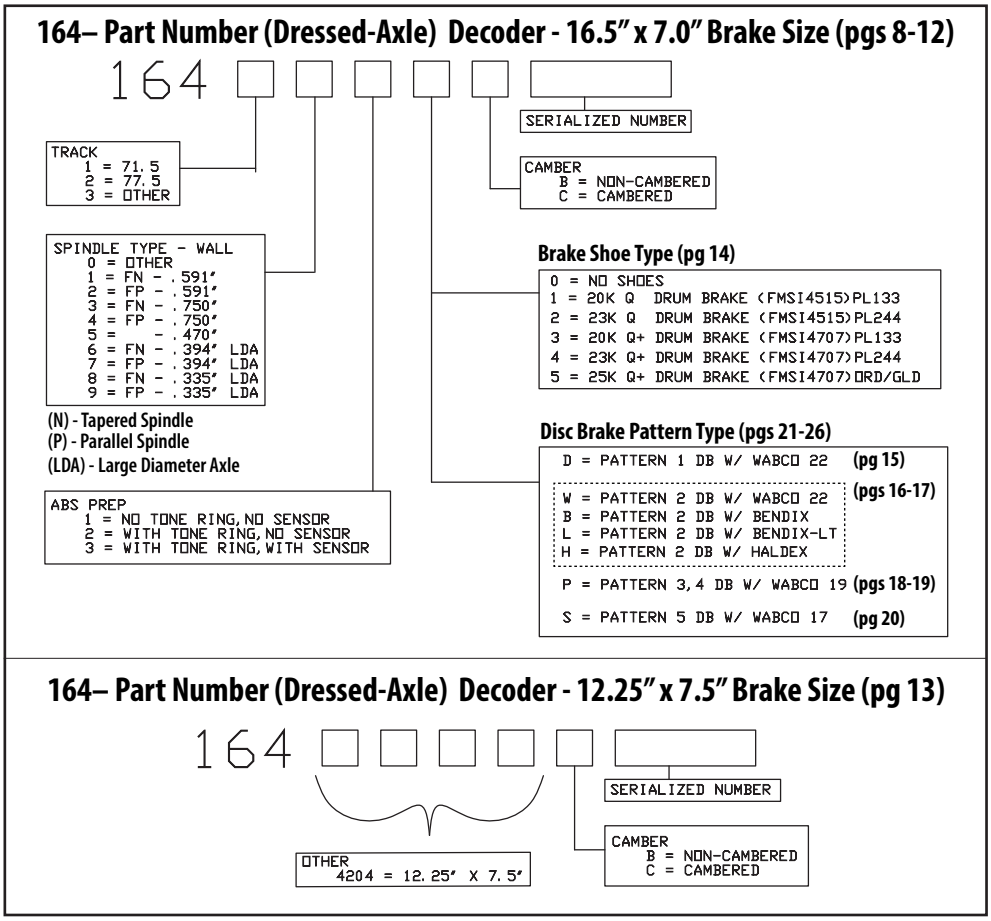

Figure 1.
The 164– Dressed-Axle Part Number describes a 5-inch Standard or a 5 3/4-inch Large Diameter Axle (LDA) with a drum or disc brake assembly and wheel-end equipment.

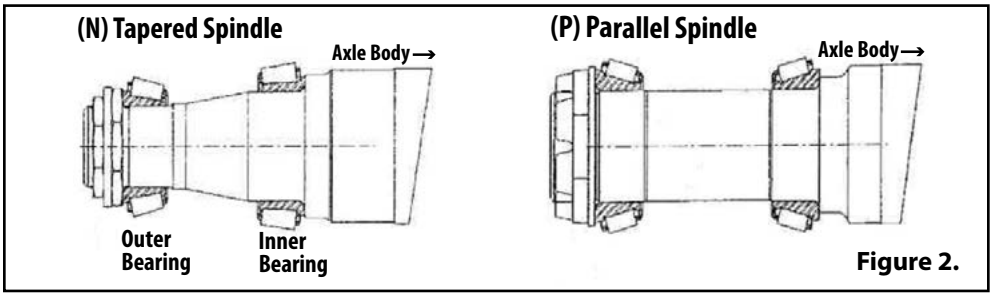

Figure 2.

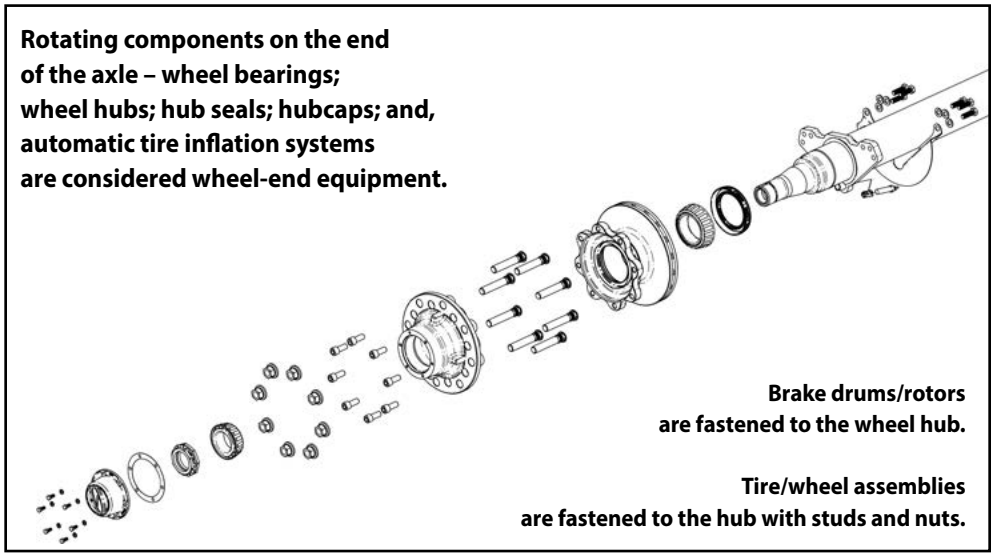

Standard Trailer Dimensions

Trailer suspensions fit up onto standard I-beam trailer frames at the beam centers that correspond to standard axle track widths. Installation at wider beam centers will reduce the suspension clearances. Installation at narrower beam centers will de-rate the axle beam capacity.

NOTE: For other, non-standard beam centers, frames, frame centers, axle track widths and wheel-end equipment, the suspension installer is responsible for verifying clearances, axle capacity, proper fit-up, and any additional required suspension support structure.

Gross Axle Weight Rating (GAWR)

is a term used to specify the maximum load-carrying capacity of a single axle assembly.

The GAWR is determined by the component - the axle body, the suspension, brakes, hubs, bearings, wheels and tires - with the lowest rated capacity.

Vehicle manufacturers should follow the instructions supplied by other component manufacturers to determine the ratings for components not produced by Ridewell to determine the correct Gross Axle Weight Rating (GAWR).

This ensures the vehicle manufacturer complies with the appropriate Federal regulations.

Standard Configurations	Trailer Width	Axle Track	Frame Center	Beam Center	Air Spring Center
Dual Wheel	96″	71.5″	38″	35″	31″
	102″	77.5″	44″	41″	37″
Wide-Base Wheel-Zero Offset	102″	83.5″	50″	47″	43″

5-inch Axle (Standard)			Tube Wall	
			0.591″	0.75″
Track Width (Inches)	Beam Centers (Inches)	Moment Arm (Inches)	Axle Beam CAP GAWR (lbs)	Axle Beam CAP GAWR (lbs)
71.5″	38	16.75	23,000	25,000
	37	17.25	23,000	25,000
	36	17.75	23,000	25,000
	35	18.25	23,000	25,000
	34	18.75	22,387	24,333
	33	19.25	21,805	23,701
	32	19.75	21,253	23,101
	31	20.25	20,728	22,531
	30	20.75	20,229	21,988
	29	21.25	19,753	21,471
77.5″	44	16.75	23,000	25,000
	43	17.25	23,000	25,000
	42	17.75	23,000	25,000
	41	18.25	23,000	25,000
	40	18.75	22,387	24,333
	39	19.25	21,805	23,701
	38	19.75	21,253	23,101
	37	20.25	20,728	22,531
	36	20.75	20,229	21,988
	35	21.25	19,753	21,471

5.75-inch Axle Large Diameter Axle (LDA)			Tube Wall	
			0.335″ (On-Hwy Use Only)	0.394″
Track Width (Inches)	Beam Centers (Inches)	Moment Arm (Inches)	Axle Beam CAP GAWR (lbs)	Axle Beam CAP GAWR (lbs)
71.5″	38	16.75	23,000	25,000
	37	17.25	23,000	25,000
	36	17.75	23,000	25,000
	35	18.25	23,000	25,000
	34	18.75	22,387	24,333
	33	19.25	21,805	23,701
	32	19.75	21,253	23,101
	31	20.25	20,728	22,531
	30	20.75	20,229	21,988
	29	21.25	19,753	21,471
77.5″	44	16.75	23,000	25,000
	43	17.25	23,000	25,000
	42	17.75	23,000	25,000
	41	18.25	23,000	25,000
	40	18.75	22,387	24,333
	39	19.25	21,805	23,701
	38	19.75	21,253	23,101
	37	20.25	20,728	22,531
	36	20.75	20,229	21,988
	35	21.25	19,753	21,471

Dual Wheel Configuration

(S) - Wheel Spacing
(O) - Wheel Offset
(W) - Tire Width
(T) - Axle Track
(TT) - Tire Track
(TOD) - Tire Overall Diameter
(ITW) - Inside Tire Width
(OTW) - Outside Tire Width
(SLR) - Static Load Radius

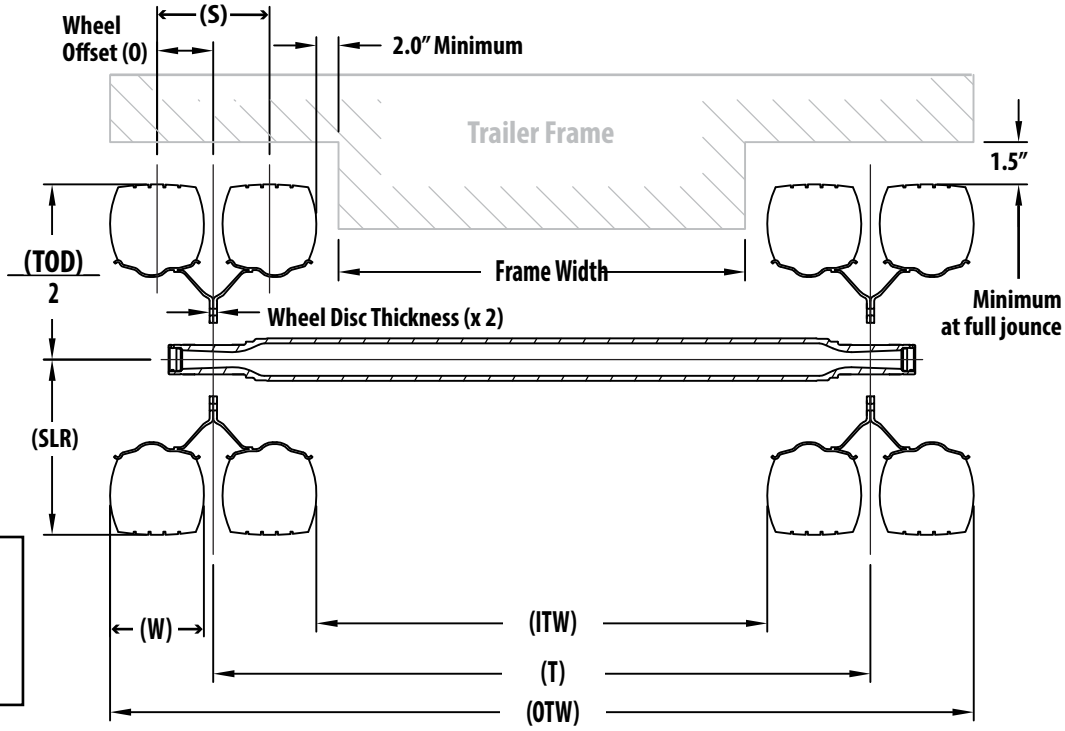

Dual Wheel Calculations

(S) = 2 x O
(OTW) = T + S + W
(ITW) = T - S - W

Single Wheel (Outset) Configuration

Axle and Bearing Rating:
Tapered (FN) spindles are not approved for use with 2-inch outset wheels. Parallel (FP) spindles are recommended for outset applications.

Offset wheels used in a single-tire configuration can reduce the axle beam rating and bearing life.

Using inset wheels in a single-tire configuration will not affect axle beam rating, but can reduce the bearing life.

Using outset wheels in a single-tire configuration moves the load point away from the center of the axle, increases the bending load in the axle, and reduces the axle beam rating and bearing life.

Contact the Ridewell Engineering Dept. to determine the rating for an axle that uses inset or outset wheels in a single-tire configuration.

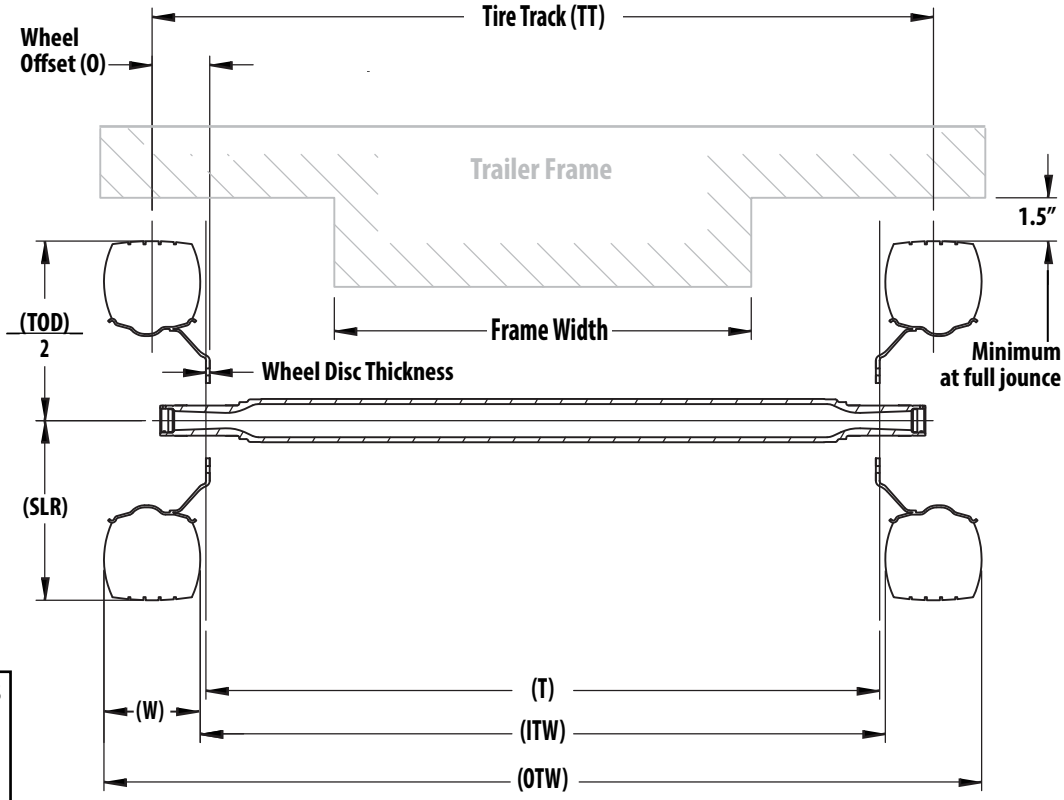

Single Wheel Calculations

(TT) = T + (2 x O) - 7/8
(OTW) = TT + W
(ITW) = TT - W

Wide-Base Wheel Configuration

(T) - Axle Track
(TT) - Tire Track
(S) - Wheel Spacing
(O) - Wheel Offset
(W) - Tire Width
(TOD) - Tire Overall Diameter
(ITW) - Inside Tire Width
(OTW) - Outside Tire Width
(WOS) - Wheel Outset
(WIS) - Wheel Inset
(SLR) - Static Load Radius

Std Config. Wide-Base Wheel-Zero Offset	Trailer Width	Axle Track	Frame Ctr	Beam Ctr	A/Spg Ctr
	102″	83.5″	50″	47″	43″

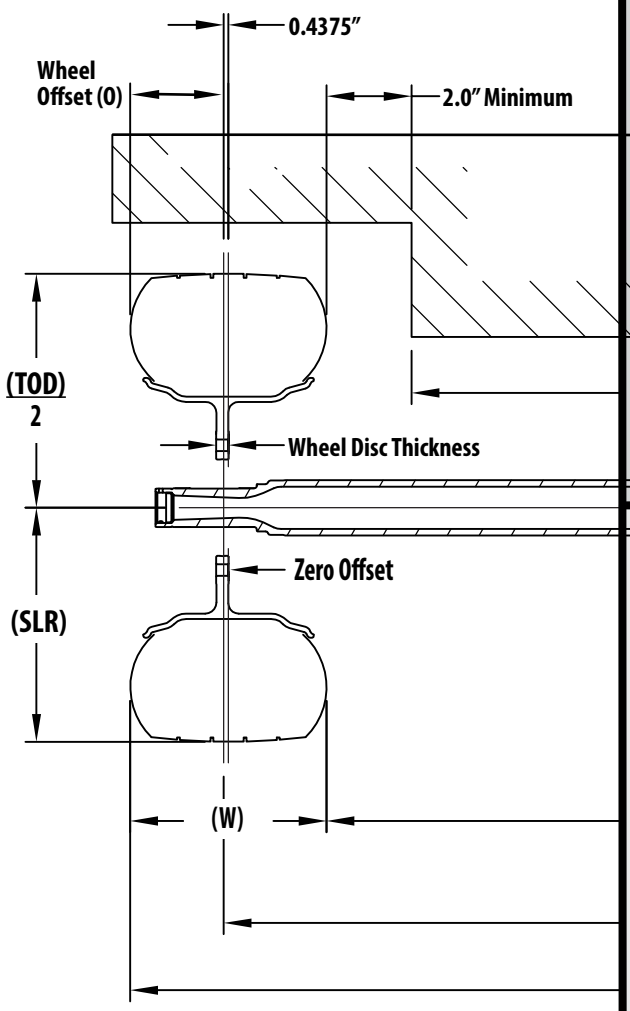

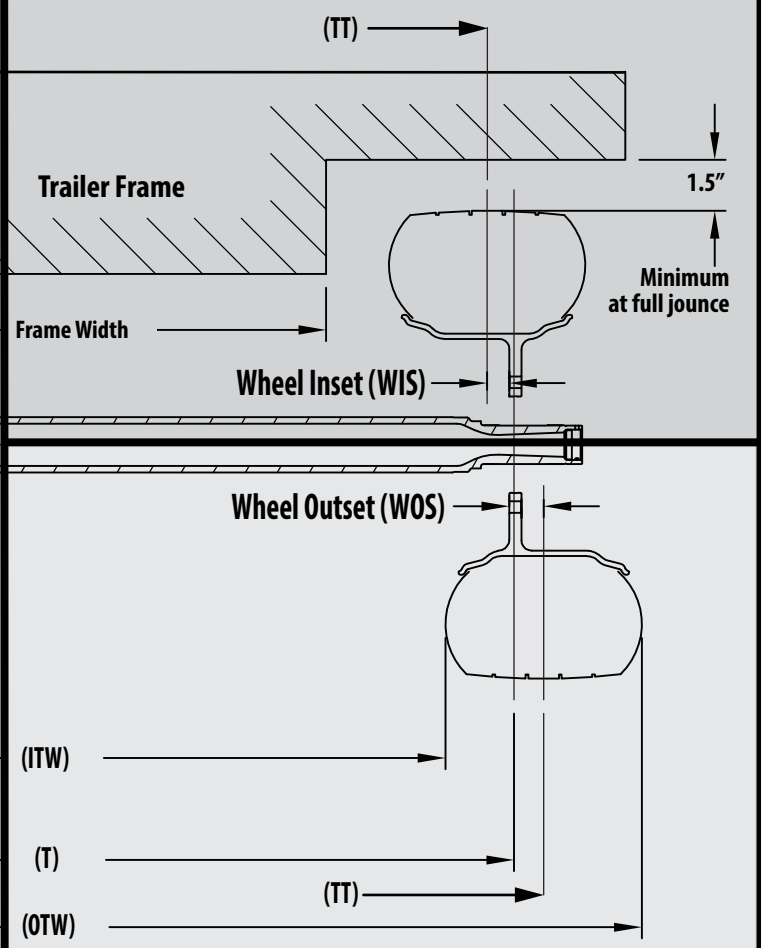

Inset Wheel Calculations

(TT) = T - (2 x WIS) - 7/8
(OTW) = TT + W
(ITW) = TT - W

Zero Offset Wheel Calculations

(O) = W/2
(TT) = T - 7/8
(OTW) = TT + W
(ITW) = TT - W

Outset Wheel Calculations

(TT) = T + (2 x WOS) - 7/8
(OTW) = TT + W
(ITW) = TT - W

Axle and Bearing Rating:

Tapered (FN) spindles are not approved for use with 2-inch outset wide-base wheels. Parallel (FP) spindles are recommended for outset applications.

Offset wheels used in a single-tire configuration can reduce the axle beam rating and bearing life.

Using inset wheels in a single-tire configuration will not affect axle beam rating, but can reduce the bearing life.

Using outset wheels in a single-tire configuration moves the load point away from the center of the axle, increases the bending load in the axle, and reduces the axle beam rating and bearing life.

Contact the Ridewell Engineering Dept. to determine the rating for an axle that uses inset or outset wheels in a single-tire configuration.

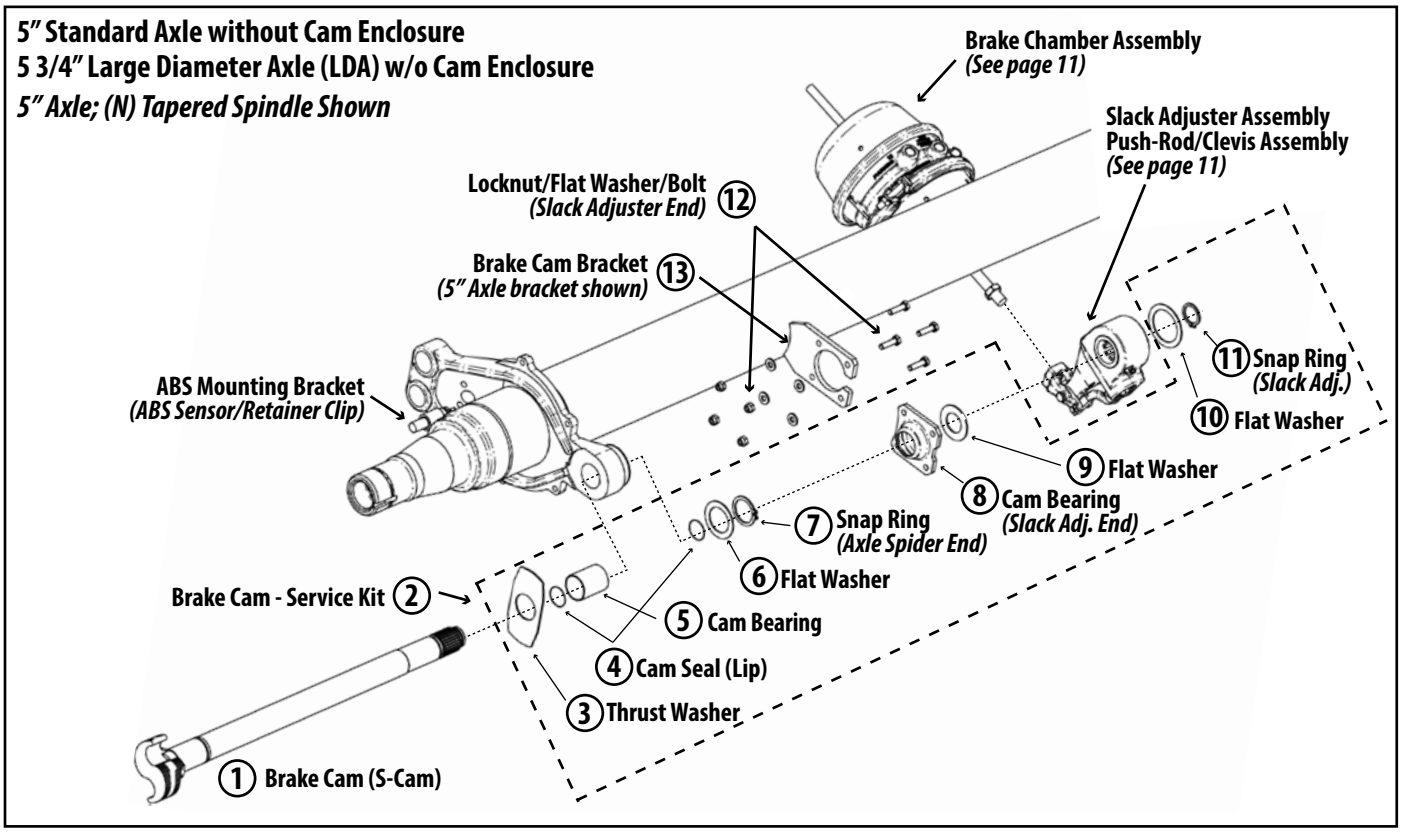

Diagram Number		QTY Per Axle	Part Number	Item Description
1		1	1667591B104	(613 mm) Left-Hand S-Cam (Q+ Brake Cams listed on page 28)
		1	1667591B204	(613 mm) Right-Hand S-Cam
		(165xxxx-Δ Base-Axles that require a custom cam-length listed on page three)		
		1	165xxxx-Δ	Left-Hand S-Cam *(Contact Ridewell for cam-length)*
		1	165xxxx-Δ	Right-Hand S-Cam *(Contact Ridewell for cam-length)*
2		1	**1667591B054–Cam Service Kit (613mm Cam)**	
Included in Service Kit	3	2	1667591B043	Thrust Washer (Axle Spider End)
	4	4	1667591B038	Lip Seal (Axle Spider End)
	5	2	1667591B039	Cam Bearing (Axle Spider End)
	6	2	1667591B014	Flat Washer (Axle Spider End)
	7	2	1667591B015	Snap Ring (Axle Spider End)
	8	2	1667591B045	Cam Bearing (Slack Adjuster End)
	9	20	1667591B044	Spacer Washer (Slack Adjuster End)
	10	2	1667591B016	Flat Washer (Slack Adjuster)
	11	2	1667591B017	Snap Ring (Slack Adjuster)
12		8	1150063	Locknut - M8 (Slack Adjuster End)
		8	1140081	Bolt (HHCS) – M8 x 30mm (Slack Adjuster End)
		8	1160031	Flat Washer (Slack Adjuster End)
13		2	7720039	Brake Cam Bracket

5" Standard Axle with Cam Enclosure
5 3/4" Large Diameter Axle (LDA) w/ Cam Enclosure
(N) Tapered Spindle Shown

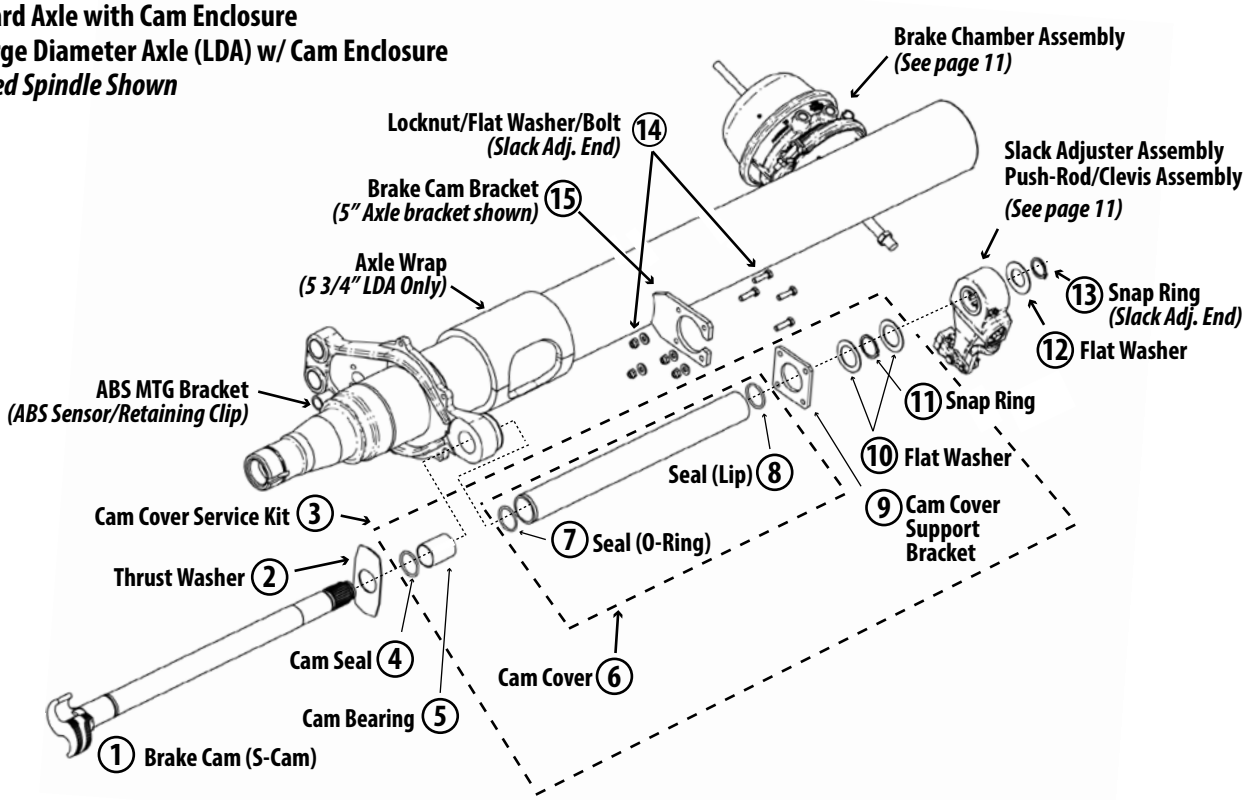

Diagram No.	QTY Per Axle	Part Number	Item Description
1	1	1667591B106	(613 mm) Left-Hand S-Cam (Q+ Brake Cams listed on page 28)
	1	1667591B206	(613 mm) Right-Hand S-Cam
	(165xxxx-Δ Base-Axles that require a custom cam-length listed on page three)		
	1	165xxxx-Δ	Left-Hand S-Cam*(Contact Ridewell for cam-length)*
	1	165xxxx-Δ	Right-Hand S-Cam *(Contact Ridewell for cam-length)*
2	2	1667591B043	Thrust Washer (S-Cam)
3	2	**1660306 Cam Cover Service Kit (613mm Cam)**	
Included in Service Kit 4	1	1667591B038	S-Cam - Seal (Axle Spider End)
Included in Service Kit 5	1	1667591B039	S-Cam - Bearing (Axle Spider End)
Included in Service Kit 6	1	1667591B036	Cam Cover Assembly (536 mm); bushings included
Included in Service Kit 7	1	1660633	Seal (O-Ring) - Cam Cover (Axle Spider End)
Included in Service Kit 8	1	1660634	Seal (Lip) - Cam Cover (Slack Adjuster End)
Included in Service Kit 9	1	1667591B037	Support Bracket (2" Universal) - Cam Cover
Included in Service Kit 10	10	1667591B044	S-Cam - Spacer Washer (Slack Adjuster End)
Included in Service Kit 11	1	1667591B009	S-Cam - Snap Ring (Slack Adjuster End)
12	2	1667591B016	S-Cam - Spacer Washer (Slack Adjuster)
13	2	1667591B017	S-Cam Snap Ring (Slack Adjuster)
14	8	1150063	Locknut - M8 (Slack Adjuster End)
	8	1140081	Bolt (HHCS) – M8 x 30mm (Slack Adjuster End)
	8	1160031	Flat Washer (Slack Adjuster End)
15	2	7720039	Cam Bracket - 5"Standard Axle
	2	7004538	Cam Bracket - 5 3/4" LDA

5 3/4" Large Diameter Axle (LDA) w/ Short Cam Enclosure
(N) Tapered Spindle Shown

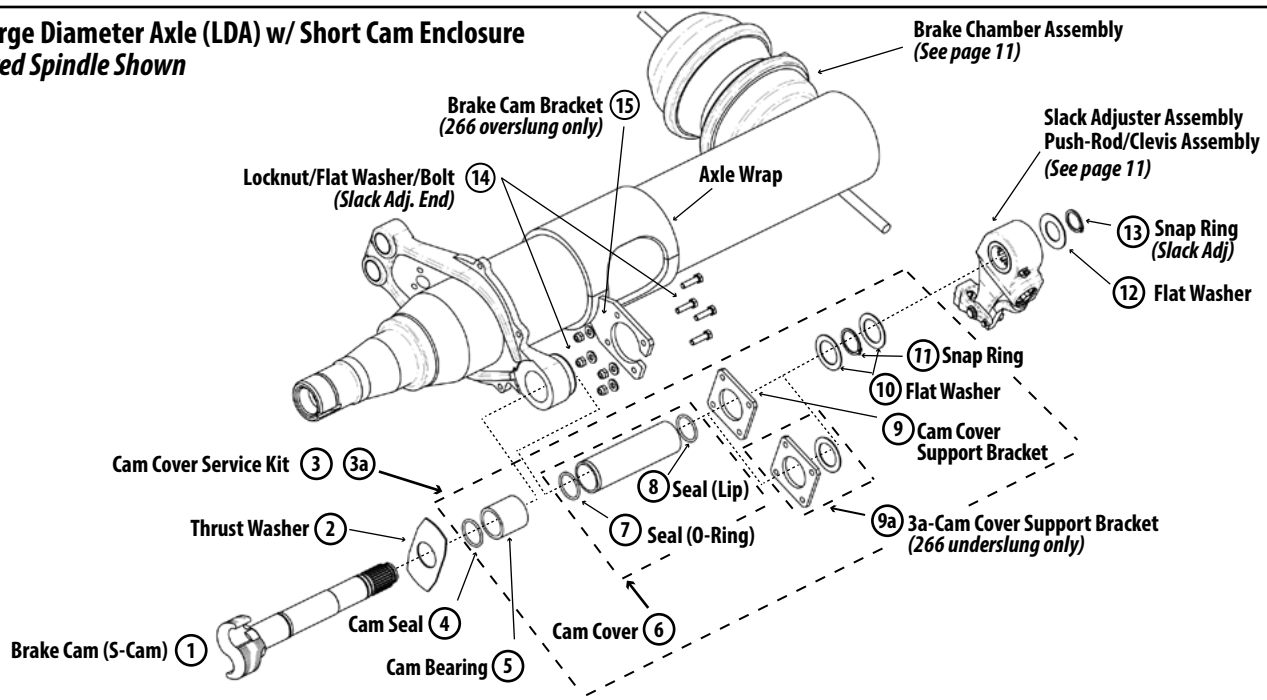

Diagram No.		QTY/Axle	Part Number	Item Description
1		1	1667591B108	(283 mm) Left-Hand Short S-Cam (Q+ Brake Cams listed on page 28)
		1	1667591B208	(283 mm) Right-Hand Short S-Cam
2		2	1667591B043	Thrust Washer (S-Cam)
3		2	**1660387–283mm Cam Cover Service Kit for RAR 266 Overslung Suspensions**	
Included in Service Kit	4	1	1667591B038	S-Cam - Seal (Axle Spider End)
	5	1	1667591B039	S-Cam - Bearing (Axle Spider End)
	6	1	1667591B049	Short Cam-Cover Assembly (169.5 mm); Bushings included
	7	1	1660633	Seal (O-Ring) - Cam Cover (Axle Spider End)
	8	1	1660634	Seal (Lip) - Cam Cover (Slack Adjuster End)
	9	1	1667591B037	Support Bracket (2" Universal) - Cam Cover
	10	10	1667591B044	S-Cam - Spacer Washer (Slack Adjuster End)
	11	1	1667591B009	S-Cam - Snap Ring (Slack Adjuster End)
3a		2	**6040225–283mm Cam Cover Service Kit for RAR 266 Underslung (Low-Mount) Suspensions**	
Included in Service Kit	4	1	1667591B038	S-Cam - Seal (Axle Spider End)
	5	1	1667591B039	S-Cam - Bearing (Axle Spider End)
	6	1	1667591B049	Short Cam-Cover Assembly (169.5 mm); Bushings included
	7	1	1660633	Seal (O-Ring) - Cam Cover (Axle Spider End)
	8	1	1660634	Seal (Lip) - Cam Cover (Slack Adjuster End)
	9a	1	7002913	Cam Cover Bolt Flange - 266 Low-Mount
	9a	1	7002914	Weld Flange Cam Cover - 266 Low-Mount
	10	10	1667591B044	S-Cam - Spacer Washer (Slack Adjuster End)
	11	1	1667591B009	S-Cam - Snap Ring (Slack Adjuster End)
12		2	1667591B016	S-Cam - Spacer Washer (Slack Adjuster)
13		2	1667591B017	S-Cam Snap Ring (Slack Adjuster)
14		8	1150063	Locknut - M8 (Slack Adjuster End)
		8	1140081	Bolt (HHCS) – M8 x 30mm (Slack Adjuster End)
		8	1160031	Flat Washer (Slack Adjuster End)
15		2	7002997	LDA Brake Cam Bracket (B13-6301) – RAR 266 overslung only

Brake Chamber – (16.5″ x 7.0″ Brake Size)					
Part Number	**Brake Chamber Type**	**Stroke Length**	**Push-Rod Length (in)**	**Manufacturer**	**Notes**
5″ Standard Axle (Straight)					
1660191	Type 20	2.50	5.750	DiPro	
1660421	Type 30	2.50	5.700	Haldex	
1660176	Type 30	2.50	5.750	DiPro	
1660259	Type 30	2.50	5.750	FUWA	
1664702B303	30/30	2.50	5.625	MGM	
1660174	30/30	2.50	5.750	DiPro	
1660285	30/30	2.50	5.750	FUWA	
1660381	30/30	2.50	5.750	TSE	OMNI
1660550	30/30	2.50	5.750	Wabco	TRISTOP IBV
1660250	30/30	2.50	5.700	Haldex	Gold Seal (GS)
1660357	30/30	3.00	5.750	TSE	OMNI
1660382	30/30	3.00	5.750	TSE	
1660345	30/30	3.00	5.625	MGM	
1660342	30/30	3.00	5.625	MGM	
5 3/4″ Large Diameter Axle – Overslung (RAR-266 Suspension)					
1667591B047	30/30	2.50	9.750	FUWA	
1660598	Type 30	2.50	9.900	Haldex	
1667591B053	30/30	2.50	9.800	Haldex	Gold Seal (GS)
1667591B055	30/30	2.50	9.800	Haldex	Life Seal (LS)
1660551	30/30	2.50	9.800	Wabco	TRISTOP IBV
1660605	30/30	3.00	9.750	TSE	OMNI
5 3/4″ Large Diameter Axle – Underslung (RAR-266 Suspension)					
1667591B057	30/30	2.50	5.750	FUWA	Long Cam
Long Push-Rod – Cut push-rod to required length					
1660283	30/30	2.50	12.0	DiPro	Ships uncaged

Slack Adjuster (Brake Size - 16.5″ x 7.0″)				
Part Number	**Slack Size**	**Spline**	**Manufacturer**	**Clevis/Anchor Pin**
1660501	5.5″	28	Gunite	Requires Clevis-1660290
1664206B038	5.5″	28	Haldex	Requires Clevis-1667591B001; Anchor Pin-1667511B006
1660179	5.5″	28	Bendix	Includes Clevis
1660173	6″	28	Bendix	Includes Clevis
1660289	6″	28	Gunite	Requires Clevis-1660290
1664206B011	6″	28	Haldex	Requires Clevis-1667591B001; Anchor Pin-1667511B006
1667591B048	6″	28	FUWA	Includes Clevis

16.5"x7.0" Brake Size–Hub and Drum Components (Hub-Piloted) - 10-Stud x 11.25" Bolt Circle										
Spindle	Hub Mtrl	Drum Mtrl	Stud Lgth	Tone Ring	Side Fill Port	Hub Part Number	Drum Part Number	Hub MFG	Hub & Drum Part Number	Wheel Stud Part Number
P	Cast Iron-Easy Roll	Lightweight	Long	Yes	No	1660389	1667511B027	WEMC		02-00045
	Cast Iron	Lightweight	Long	No	Yes	1660234	1667511B027	Gunite		W1402
	Cast Iron	Lightweight	Long	Yes	Yes	1660235	1667511B027	Gunite		W1402
	Cast Iron	Lightweight	Long	Yes	Yes	1660344	1667511B027	KIC		1660083
	Cast Iron	Cast Iron	Long	No	Yes		1667591B031	RW Std	1660060	1660083
	Cast Iron	Cast Iron	Short	Yes	Yes		1667591B031	RW Std	1660069	1660056
	Cast Iron	Cast Iron	Short	No	Yes		1667591B031	RW Std	1660157	1660056
	Cast Iron	Cast Iron	Long	Yes	Yes	1660344	1667591B031	RW Std	1660186	1660083
	ALUM	Lightweight	Long	Yes	Yes	1660196	1667511B027	ConMet		102292
	ALUM	Cast Iron	Long	Yes	Yes	1660196	1667591B031	ConMet		102292
	ALUM	Cast Iron	Long	Yes	Yes	1660196	1667591B034	ConMet		102292
	ALUM	Lightweight	Long	No	Yes	1660266	1667511B027	ConMet		102291
	ALUM	Lightweight	Long	Yes	Yes	1660277	1667511B027	ConMet		102291
	ALUM	Cast Iron	Long	Yes	Yes	1660277	1667591B031	ConMet		102291
	ADI	Lightweight	Short	No	No	1660187	1667511B027	Wemc		02-00110
	ADI	Lightweight	Long	Yes	Yes	1660213	1667511B027	WEMC		1660610
	ADI	Cast Iron	Long	Yes	Yes	1660213	1667591B031	WEMC		1660610
	ADI	Lightweight	Long	No	Yes	1660251	1667511B027	WEMC		1660610
	ADI	Lightweight	Short	Yes	No	1660340	1667511B027	WEMC		02-00110
N	Cast Iron-Fat Boy		Long	Yes	No	1667511B034		WEMC		02-00045
	Cast Iron	Lightweight	Long	Yes	Yes	1667511B035	1667511B027	KIC		1660083
	Cast Iron	Cast Iron	Long	No	Yes		1667591B031	RW Std	1667511B000	1660083
	Cast Iron	Cast Iron	Short	No	Yes		1667591B031	RW Std	1667511B004	1660056
	Cast Iron	Cast Iron	Short	Yes	Yes		1667591B031	RW Std	1667511B015	1660056
	Cast Iron	Cast Iron	Long	Yes	Yes	1667511B035	1667591B031	RW Std	1667511B016	1660083
	ALUM	Lightweight	Long	Yes	Yes	1660249	1667511B027	ConMet		102190
	ALUM	X30	Long	Yes	Yes	1667511B019	1667511B013	ConMet		102189
	ALUM	Lightweight	Long	Yes	Yes	1667511B019	1667511B027	ConMet		102189
	ADI	Cast Iron	Long	Yes	Yes	1667511B026		WEMC		1660610
	ADI	Lightweight	Long	Yes	Yes	1667511B026	1667511B027	WEMC		1660610
1660057		Flanged Wheel Nut-M22x1.5x33 (1.30" x 1.22") - *See Drum Brake/Wheel End Parts (pg 27)*								

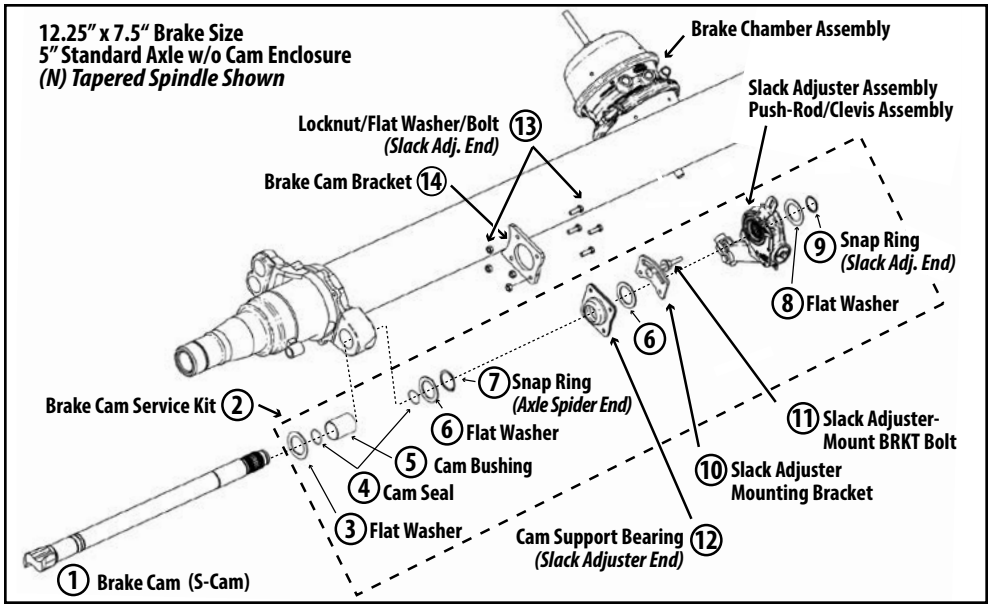

Diagram Number		QTY Per Axle	Part Number/Manufacturer Part Number	Item Description
1		1	Meritor - R607253	(594 mm) Left-Hand S-Cam (Q+ Brake Cams listed on page 28)
		1	Meritor - R607254	(594 mm) Right-Hand S-Cam
2		1	**Meritor - R615020–Cam Service Kit (594mm Cam)**	
Included in Service Kit	3	2	Meritor-E-719	S-Cam Washer (Spider End)
	4	4	Meritor-R627018	S-Cam Seal (Spider End)
	5	2	Meritor-R657001	S-Cam Bushing (Spider End)
	6	8	1667591B016	S-Cam Washer (Slack Adjuster End)
	7	4	Meritor-1229-Z-1118	S-Cam Snap Ring (Spider End)
	8	2	1667591B044	Spacer Washer (Slack Adjuster End)
	9	2	1667591B017	Snap Ring (Slack Adjuster)
10		2	1667591B056	Slack Adjuster Mounting Bracket
11		2	1667511B006	Slack Adjuster Mounting Bracket Bolt (Flat)
12			1667591B045	S-Cam Support Bearing (Slack Adjuster End)
13		8	1150063	Locknut - M8 (Slack Adjuster End)
		8	1140081	Bolt (HHCS) – M8 x 30mm (Slack Adjuster End)
		8	1160031	Flat Washer (Slack Adjuster End)
14		2	7720039	Brake Cam Bracket

Brake Chamber	Part Number	Stroke Length	Push-Rod Length	Manufacturer
Type 30	1664204B004	2.50"	4.25"	DiPro
30/30	1664204B003	2.50"	4.25"	DiPro

Slack Adjuster	Part Number	Slack Size	Spine	Clevis Included/Added Kit
FUWA (MFG)	1664204B005	6"	28"	1667591B001 *(Includes Anchor Pin)*

Hub and Drum (Hub-Piloted – 8-Stud x 10.83" Bolt Circle)

Spindle Type	Hub Material	Drum Material	Stud Length	Tone Ring	Side Fill Port	Hub Part Number	Drum Part Number	Manuf.	Hub & Drum Part Number	Wheel Stud Part Number
N	Cast Iron	Cast Iron	Short	Yes	Yes	Hub-0013FT	54244-01	KIC	1664204B001	1660056
	Cast Iron	Cast Iron	Short	No	Yes	Hub-0013F	54244-01	KIC	1664204B002	1660056
	Cast Iron	Cast Iron	Long	No	Yes	Hub-0013FL	54244-01	KIC	1664205B004	1660083
	Cast Iron	Cast Iron	Long	Yes	Yes	1664205B013	54244-01	KIC	1664205B005	1660083

1660057 - Flanged Wheel Nut-M22x1.5x33 (1.30" x 1.22") - *See Drum Brake/Wheel End Parts (pg 27)*

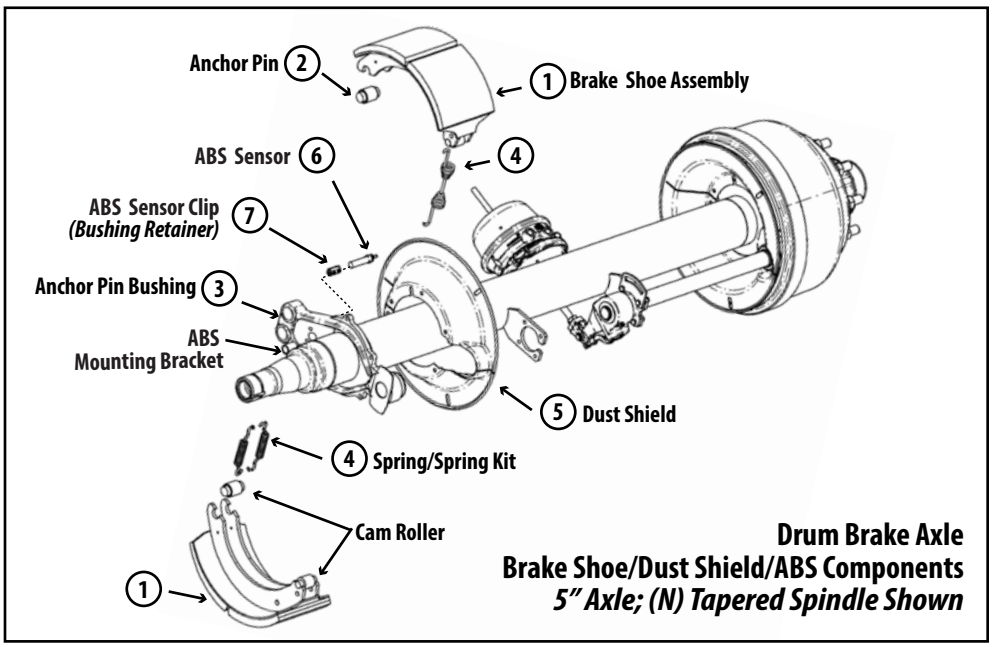

Drum Brake Components – Service Parts

DGMN No.	QTY Per Axle	Item Description	16.5" x 7.0" Brake Size 20K Brake Rating-PL133	16.5" x 7.0" Brake Size-23K Brake Rating-PL244	12.25" x 7.5" Brake Size 20K Brake Rating-PL244
1	4	Brake Shoe/Brake Lining ASY *(includes brake cam roller and clip)*	Q+ 1667591B305 FMSI-4707	Q+ 1667591B306 FMSI 4707	Q 1664204B006 FMSI 4692
2	4	Anchor Pin	1667591B010	1667591B010	1667591B010
3	4	Anchor Pin Bushing	Meritor 1225-B-496	Meritor 1225-B-496	Meritor 1225-B-496
4	4	Retainer Spring	1667591B012	1667591B012	1667591B012
	2	Return Spring	1667591B035	1667591B035	1664204B011

DGMN No.	QTY Per Axle	Item Description	Part Number
5	2	16.5" x 7.0" Dust Shield (18.11"OD 2.83 DP)	1667511B005
	12	Hex Washer Head Screw 5/16 - 18NC .5"LG	1137511B005
5	2	12.25" x 7.5" Dust Shield (13.78"OD 2.38 DP)	1664204B008
	8	Hex Washer Head Screw 5/16 - 18NC .5"LG	1137511B005

Anti-Lock Brake System (ABS) Components – Service Parts

DGMN No.	QTY Per Axle	Manufacturer	MFR Part Number	Item Description (Lead Length)	Sensor Type	Part Number
6	2	Wabco	4410328080	Sensor *(< 1 ft Lead)*	90-Degree	1664702B001*(Obsolete)*
	2		4410323340	Sensor *(3.28 ft Lead)*	Straight	1664702B003*(Obsolete)*
7	2		8997598154	Sensor Clip *(Bushing Retainer)*	—	1664702B002
6	2	Bendix	K145016BX	Sensor *(5.58 ft Lead)*	Straight	1664702B010
	2		K144020BX	Sensor *(5.58 ft Lead)*	90-Degree	1664702B012
7	2		K152407	Sensor Clip *(Bushing Retainer)*	—	1664702B002
—	—		300259	Sensor Extension Cable *(10-ft)*	—	1420210

(D) ADB PATTERN 1 AXLE-Discontinued

5" Axle; (P) Parallel Spindle Shown

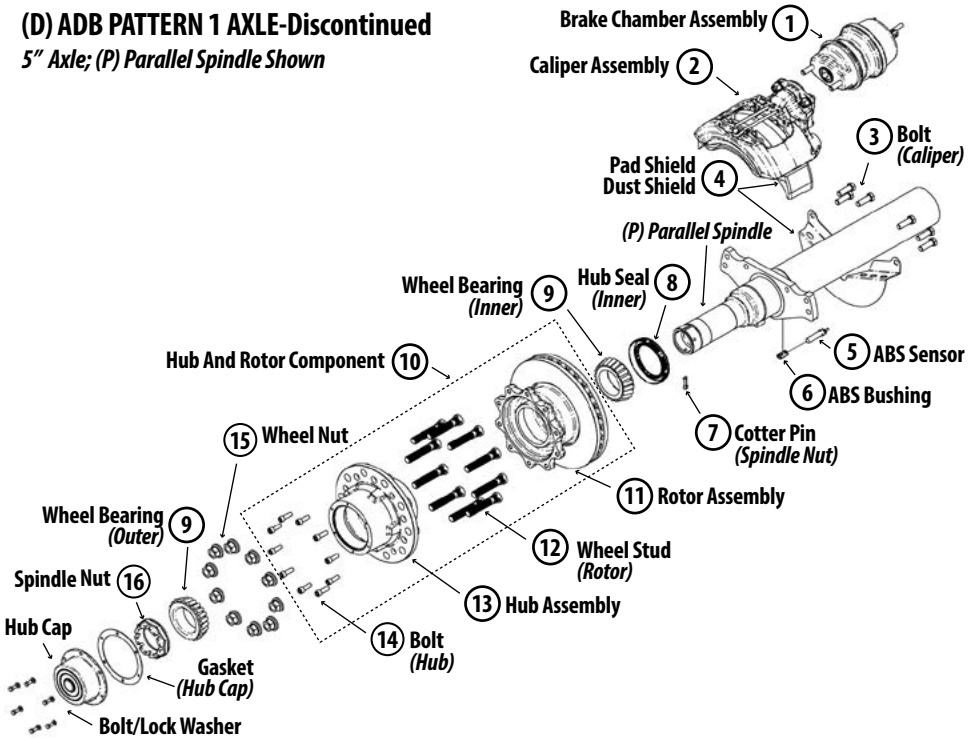

See 164– Dressed-Axle Part Number Definitions on page 4 for axle identification.

164xxxDxxxx–Wabco Caliper

DIAG No.	QTY/Axle	Part Number	Item Description
1	1	1660351	SPG BRK CHMBR ASY (20/24), 45 Deg. (20K brake rating)
	1	1660352	SPG BRK CHMBR ASY (20/24), 135 Deg. (20K brake rating)
	1	1660203	SPG BRK CHMBR ASY (24/24), 45 Deg. (23K brake rating)
	1	1660204	SPG BRK CHMBR ASY (24/24), 135 Deg. (23K brake rating)
	1	1660433	Brake actuator, Service Only, Type 20, 45 Deg. (20K brake rating)
	1	1660434	Brake actuator, Service Only, Type 20, 135 Deg. (20K brake rating)
	1	1660205	Brake actuator, Service Only, Type 24, 45 Deg. (23K brake rating)
	1	1660206	Brake actuator, Service Only, Type 24, 135 Deg. (23K brake rating)
2	1	1660360	Caliper Assembly (Left-Hand)
	1	1660361	Caliper Assembly (Right-Hand)
	1	1660362	Pad Kit, PAN 22 *(Not Shown)*
3	10	1130045	Hex Head Cap Screw (HHCS) M16-1.5 x 55mm; GR 10.9
	2	1130046	Hex Head Shoulder Cap Screw (HHSCS) M16-1.5 x 55mm; GR 10.9
4	2	1660386	Dust Shield – Pattern 1 - PAN 22
5	2	1664702B010	ABS - Sensor *(See page 14)*
6	2	1664702B002	ABS - Bushing *(See page 14)*
7	2	1660373	Cotter Pin *(Spindle Nut-See page 27)*
8	2	1660215	Hub Seal (Inner)
9	4	1660304	Bearing Cone - 3.5" ID (Inner/Outer)
10	2	1660359	Hub and Rotor Component (P) Spindle - PAN 22
11	2	1660363	Rotor, PAN 22
12	20	1660083	Wheel Stud - M22 x 1.5; 4.79" length
13	2	1660364	Hub Assembly - (P); 10-Stud (with cups and wheel nuts)
14	20	1130044	Rotor to Hub Fastener M16 - 2 x 35mm; GR 10.9
15	20	1660057	Wheel Nut *(See page 27)*
16	2	1660597	Spindle Nut Kit *(Castle Nut Kit-See page 27)*
—	2	1660xxx	Hubcap *(Lubrication Options - Oil or Hard/Semi-Fluid Grease; see page 29)*
—	2	1660055	Hubcap Gasket *(See page 29)*

22.5" Wheel Size – Bendix; Haldex; Wabco Caliper

See 164– Dressed-Axle Part Number Definitions on page 4 for axle identification

164xxxBxxxx–Bendix Caliper
164xxxLxxxx–Bendix Light-Duty Caliper
164xxxHxxxx–Haldex Caliper
164xxxWxxxx–Wabco Caliper

(W,B,L) ADB PATTERN-2 AXLE

5" Standard Axle or 5 3/4" Large Diameter Axle (LDA)
5" Axle; (P) Parallel Spindle Shown

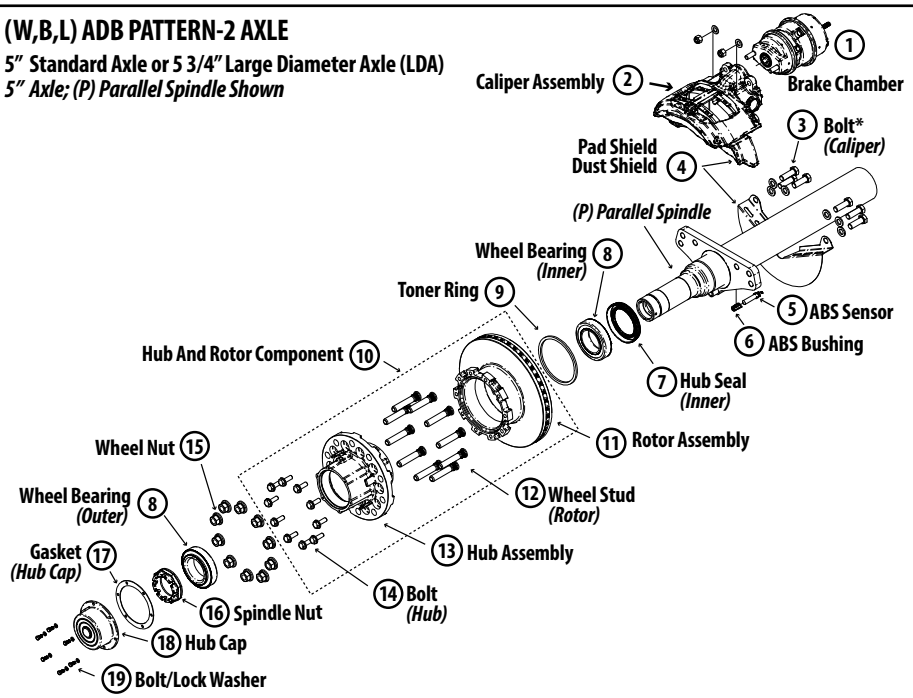

DIAG No.	QTY/Axle	Part No.	Item Description
1	1	1660728	SPG BRK CHMBR ASY - Bendix (18/24) 45 Deg.(20K/23K brake rating)
	1	1660729	SPG BRK CHMBR ASY - Bendix (18/24) 135 Deg. (20K/23K brake rating)
	1	1660690	SPG BRK CHMBR ASY - Haldex (18/24) 45 Deg. (20K/23K brake rating)
	1	1660691	SPG BRK CHMBR ASY - Haldex (18/24) 135 Deg. (20K/23K brake rating)
	1	1660351	SPG BRK CHMBR ASY - Wabco (20/24) 45 Deg. (20K brake rating)
	1	1660352	SPG BRK CHMBR ASY - Wabco (20/24) 135 Deg. (20K brake rating)
	1	1660203	SPG BRK CHMBR ASY - Wabco (24/24) 45 Deg. (23K brake rating)
	1	1660204	SPG BRK CHMBR ASY - Wabco (24/24) 135 Deg. (23K brake rating)
	1	1660456	Brake actuator, Service Only, Bendix/Haldex (Type 18) 40 Deg. (20K/23K brake rating)
	1	1660457	Brake actuator, Srvc Only, Bendix/Haldex (Type 18) 140 Deg. (20K/23K brake rating)
	1	1660433	Brake actuator, Srvc Only, Wabco (Type 20) 45 Deg. (20K brake rating)
	1	1660434	Brake actuator, Srvc Only, Wabco (Type 20) 135 Deg. (20K brake rating)
	1	1660205	Brake actuator, Srvc Only, Wabco (Type 24) 45 Deg. (20K brake rating)
	1	1660206	Brake actuator, Srvc Only, Wabco (Type 24) 135 Deg. (20K brake rating)
2	1	1660401	Bendix ADB22X, Caliper Assembly (Right-Hand)
	1	1660402	Bendix ADB22X, Caliper Assembly (Left-Hand)
	1	1660528	Bendix ADB22X-LT, Caliper Assembly (Left-Hand)
	1	1660529	Bendix ADB22X-LT, Caliper Assembly (Right-Hand)
	1	1660515	Haldex DBT22LT, Caliper Assembly (Left-Hand)
	1	1660516	Haldex DBT22LT, Caliper Assembly (Right-Hand)
	1	1660403	Wabco, PAN 22 Caliper Assembly (Left-Hand)
	1	1660404	Wabco, PAN 22 Caliper Assembly (Right-Hand)
2	1	1660362	Pad Kit, Wabco PAN 22 *(Not Shown)*
	1	1660546	Pad Kit, Bendix ADB22X ; ADB22X-LT *(Not Shown)*
	1	1660686	Pad Kit, Haldex DBT22LT *(Not Shown)*
3	12	1140087	Bolt (HHCS) M20-2.5x60mm; GR 10.9 *(Obsolete)*
	12	1160025	Flat Washer (M20) *(Obsolete)*
	12	1130093	Flanged Bolt (HHCS) M20-2.5x55mm GR10.9 *(Flanged bolt replaces bolt/lock washer)*
4	2	1660422	Dust Shield
	2	1660479	Pad Shield - Bendix *(Caliper Only)*

Continued on next page

DIAG No.	QTY/Axle	Part No.	Item Description
5	2	1664702B010	ABS - Sensor *(See page 14)*
6	2	1664702B002	ABS - Bushing *(See page 14)*
7	2	1660494	Hub Seal (Inner) - National Gold PTFE
	2	1660276	Hub Seal (Inner) - STEMCO Guardian® HP
8	4	1660304	Bearing Cone - 3.5″ ID (Inner/Outer)
9	2	1660441	Tone Ring *(ConMet® Hub 1660405/1660356–before 04/01/2018)*
	2	1660604	Tone Ring *(ConMet Hub 1660405/1660356–04/01/2018-03/01/2019)*
	2	1660615	Tone Ring *(ConMet Hub 1660405/1660356–after 03/01/2019)*
10	2	1660400	Gunite® - Hub, Rotor, and Tone Ring Assembly, Cast/Cast *(Discontinued)*
11	2	1660439	Gunite - Rotor Only w/ Integral Tone Ring
12	20	W1402	Wheel Stud - Gunite
13	2	Not Available	Gunite - Hub Only
14	20	1140092	Bolt - Rotor to Hub; Gunite (5/8″- 11)
	20	1160029	Washer - Rotor to Hub; Gunite (5/8″)
10	2	1660603	KIC - Hub and Rotor w/ Integral Tone Ring *(Discontinued)*
11	2	1660614	KIC - Rotor Only w/ Integral Tone Ring *(Discontinued)*
	2	1660439	Gunite - Rotor Only w/ Integral Tone Ring (Requires P/N 1140092 and P/N 1160029)
12	20	1660083	Wheel Stud - KIC
13	2	Not Available	KIC - Hub Only
14	20	Not Available	Bolt - Rotor to Hub; KIC (M16 x 2 x 45 HHCS)
	20	Not Available	Washer - Rotor to Hub; KIC (M16; Hardened)
10	2	1660676	Accuride - Hub, Rotor, and Tone Ring Assembly *(Discontinued)*
11	2	1660439	Gunite - Rotor Only w/ Integral Tone Ring
12	20	1660083	Wheel Stud - KIC
13	2	Not Available	KIC - Hub Only
14	20	1140092	Bolt - Rotor to Hub; Gunite (5/8″ - 11)
	20	1160029	Washer - Rotor to Hub; Gunite (5/8″)
10	2	1660405	ConMet - Hub, Rotor, and Tone Ring Assembly, AL/Cast
	2	1660356	ConMet PreSet® - Hub, Rotor, and Tone Ring Assembly, AL/Cast *(Discontinued)*
	2	1660642	ConMet PreSet Plus® - Hub, Rotor, and Tone Ring Assembly, AL/Cast
	2	1660730	ConMet PreSet Plus® - Hub, Rotor, and Tone Ring Assembly, Cast Iron
11	2	1660440	ConMet - Rotor Assembly w/ Integral Tone Ring
12	20	102291	Wheel Stud - ConMet (M22 x 1.5 mm x 4.97 Lg [3.44″ Standout])
13	2	Not Available	ConMet - Hub Only
14	20	10009971	Flanged Nut (5/8″-18) Rotor to Hub - ConMet
10	2	1660552	Walther EMC - Hub, Rotor, and Tone Ring Assembly, ADI/Cast
11	2	1660554	Walther EMC - Rotor Kit w/ Integral Tone Ring *(Each service kit includes 10 pcs-1660553)*
12	20	1660553	Wheel Stud - Walther EMC
13	2	1660555	Walther EMC - Hub only
10	2	1660685	Webb - Hub, Rotor, and Tone Ring Assembly
11	2	1660693	Webb - Rotor Only
12	20	1660694	Wheel Stud - Webb
13	2	1660695	Webb - Hub only
14	20	1130094	Bolts/Washers Rotor to Hub - Webb (5/8″ x 11)
15	20	1660057	Wheel Nut *(See page 27)*
16	2	1660597	Spindle Nut Kit *(Castle Nut Kit-See page 27)*
17	2	1660055	Hubcap Gasket *(See page 29)*
18	2	166xxxx	Hubcap *(Lubrication Options - Oil or Hard/Semi-Fluid Grease; see page 29)*
19	12	1144206B105	(Hubcap) HHCS 5/16″ - 18NC 3/4″ length
	12	1164263B100	(Hubcap) Lock Washer 5/16″

See 164– Dressed-Axle Part Number Definitions on page 4 for axle identification.

164xxxPxxxx–Wabco Caliper

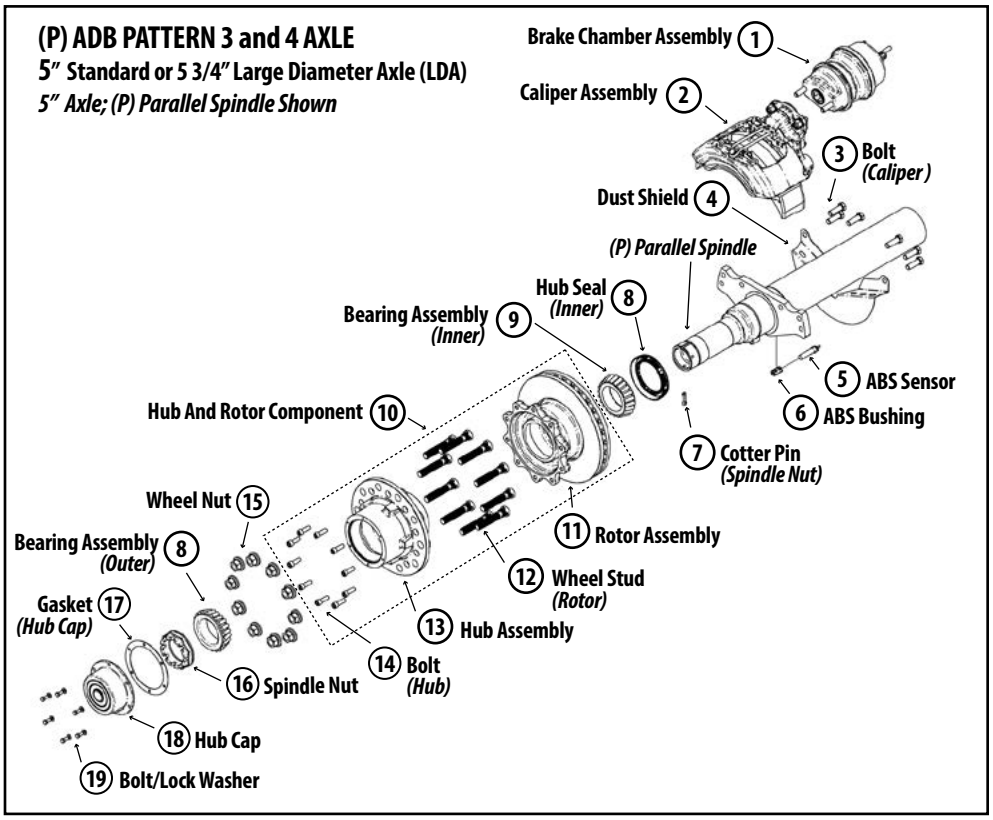

DIAG No.	QTY/Axle	Part No.	Item Description
1	1	1660428	SPG BRK CHMBR ASY (18/24), 45 Deg.
	1	1660429	SPG BRK CHMBR ASY (18/24), 135 Deg.
	1	1660351	SPG BRK CHMBR ASY, (20/24), 45 Deg.
	1	1660352	SPG BRK CHMBR ASY, (20/24), 135 Deg.
	1	1660456	Brake actuator, Service Only, Type 18 , 40 Deg.
	1	1660457	Brake actuator, Service Only, Type 18, 140 Deg.
	1	1660433	Brake Actuator, Service Only, Type 20, 45 Deg.
	1	1660434	Brake Actuator, Service Only, Type 20, 135 Deg.
2	1	1660467	Caliper Assembly (Left-Hand)
	1	1660468	Caliper Assembly (Right-Hand)
	1	1660496	Pad Kit, PAN 19 (Not Shown)
3	12	1130058	(5″ Axle) Hex Head Cap Screw (HHCS) M16x1.5 x 50mm; GR 10.9
	10	1130056	(LDA) Hex Head Cap Screw (HHCS) M16-1.5 x 59mm; GR 10.9
	2	1130057	(LDA) Hex Head Shoulder Cap Screw (HHSCS) M16-1.5 x 59mm; GR 10.9
4	2	1660500	Dust Shield
5	2	1664702B010	ABS - Sensor *(See page 14)*
6	2	1664702B002	ABS - Bushing *(See page 14)*
7	2	1660373	Cotter Pin *(Spindle Nut-See page 27)*
8	2	1660494	Hub Seal (Inner) - National Gold PTFE
	2	1660276	Hub Seal (Inner) - STEMCO Guardian® HP
9	2	1660304	Bearing Cone-3.5″ ID (Inner/Outer)

Continued on next page

Continued from previous page

DIAG No.	QTY/Axle	Part No.	Item Description
10	2	1660466	Hub and Rotor Component (FP) - PAN 19
11	2	1660495	Rotor Assembly, PAN 19
12	16	1660083	Wheel Stud - M22 x 1.5; 4.79" length
13		Not Available	PAN 19 Hub Only, Cast
14	10	Not Available	Socket Head Cap Screw (SHCS) M12 x 1.75 35mm; GR 12.9
15	20	1660057	Wheel Nut *(See page 27)*
16	2	1660597	Spindle Nut Kit *(Castle Nut Kit-See page 27)*
17	2	1660055	Hubcap Gasket *(See page 29)*
18	2	166xxxx	Hubcap *(Lubrication Options - Oil or Hard/Semi-Fluid Grease; see page 29)*
19	12	1144206B105	(Hubcap) HHCS 5/16" - 18NC 3/4" length (Torque Chart-p36)
	12	1164263B100	(Hubcap) Lock Washer 5/16" (Torque Chart-p36)

17.5" Wheel Size – Wabco Caliper

See 164– Dressed-Axle Part Number Definitions on page 4 for axle identification.

164xxxSxxxx – Wabco Caliper

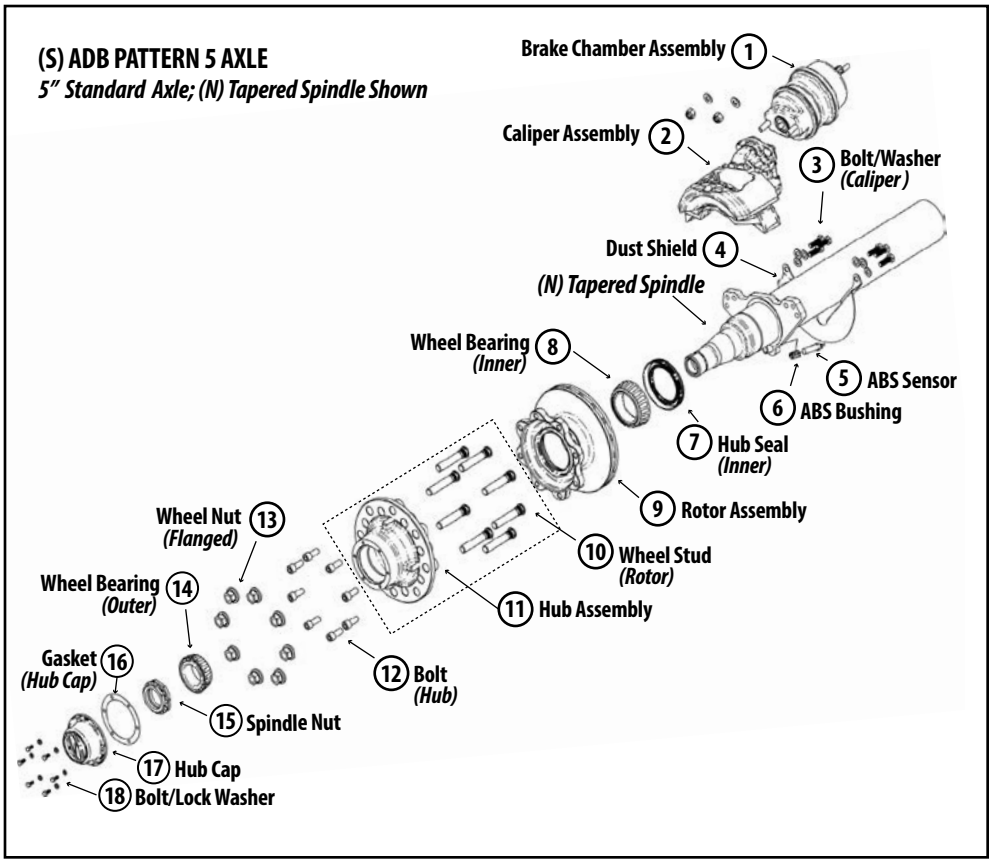

DIAG No.	QTY/Axle	Part No.	Item Description
1	1	1660351	SPG BRK CHMBR ASY, (20/24), 45 Deg. (20K brake rating)
	1	1660352	SPG BRK CHMBR ASY, (20/24), 135 Deg. (20K brake rating)
	1	1660433	Brake actuator, Service Only, Type 20, 45 Deg.
	1	1660434	Brake actuator, Service Only, Type 20, 135 Deg.
2	1	1660462	Caliper Assembly (Left-Hand)
	1	1660463	Caliper Assembly (Right-Hand)
	1	1660497	Pad Kit, PAN 17 *(Not Shown)*
3	12	1140093	Hex Head Cap Screw (HHCS) M14-1.5 X 45mm; GR 10.9
	12	1160030	Flat Washer, M14
4	1	1660503	Dust Shield
5	2	1664702B010	ABS - Sensor *(See page 14)*
6	2	1664702B002	ABS - Bushing *(See page 14)*
7	2	1660458	(Inner) Hub Seal - National Gold PTFE
8	2	1664206B008	(Inner) Wheel Bearing Cone (3.543" ID)
9	2	1660487	Rotor 325mm X 34mm, PAN 17
10	16	1660083	Wheel Stud M22x1.5; 4.79" length
11	2	1660488	Hub Assembly - FN, PAN 17
12	16	1130059	Socket Head Cap Screw (SHCS) M16-2.0 X 40mm
13	16	1660057	Wheel Nut *(See page 27)*
14	2	1664206B009	(Outer) Wheel Bearing (2.625 ID)
15	2	1664206B014	Spindle Nut Kit *(See page 27)*
16	2	1664206B007	Hubcap Gasket *(See page 29)*
17	2	166xxxx	Hubcap *(Lubrication Options - Oil or Hard/Semi-Fluid Grease; see page 29)*
18	12	1144206B105	(Hubcap) HHCS 5/16" - 18NC 3/4" length (Torque Chart-p36)
	12	1164263B100	(Hubcap) Lock Washer 5/16" (Torque Chart-p36)

Kit components fit both right-hand and left-hand calipers
Wabco Caliper - (1660403-LH) (1660404-RH)

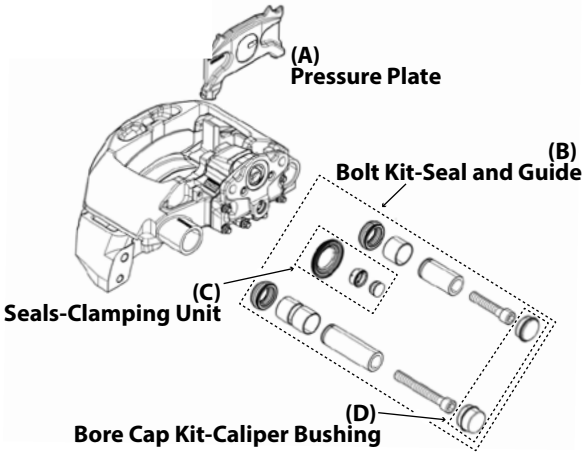

DIAG	QTY per Axle	Part No.	Item Description
A	1	1660557	Pressure Plate–PAN 17
	1	1660558	Pressure Plate–PAN 19
	1	1660559	Pressure Plate–PAN 22
B	2	1660498	Seal and Guide Bolt Kit–PAN 17
	2	1660390	Seal and Guide Bolt Kit–PAN 22
C	2	1660612	Clamp Unit Seals–PAN 17; PAN 19; PAN 22
D	1	1660541	Caliper Bushing Cap Kit–PAN 19; PAN 22
	1	N/A	PAN 17 Tool Kit–(Wabco #6401755212)
	1	6100068	PAN 19; PAN 22 Tool Kit (Basic)
	1	6100078	PAN 19; PAN 22 Tool Kit

Kit components fit both right-hand /left-hand calipers
1660401 - ADB22X Caliper (LH)
1660402 - (RH)
1660528 - ADB22X-LT Caliper (LH)
1660529 - (RH)

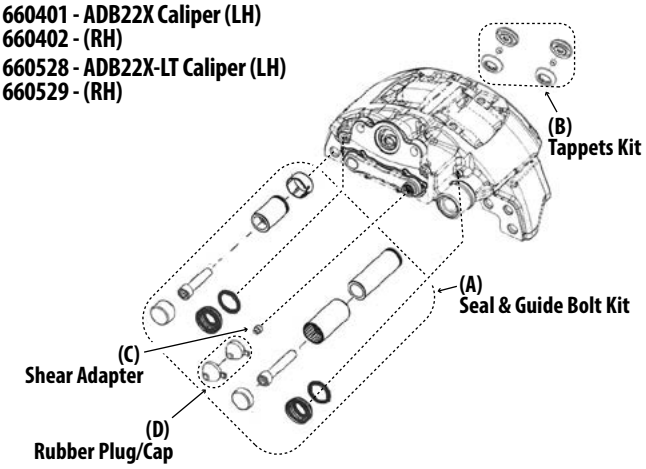

Diagram No.	QTY/Axle	Part No.	Item Description
A	2	1660443	Seal & Guide Bolt Kit
B	2	1660445	Tappets Kit *(tappet and boot)*
C	2	1660451	Shear Adapter (Box of 10)
D	2	1660444	Rubber plug (Box of 20)

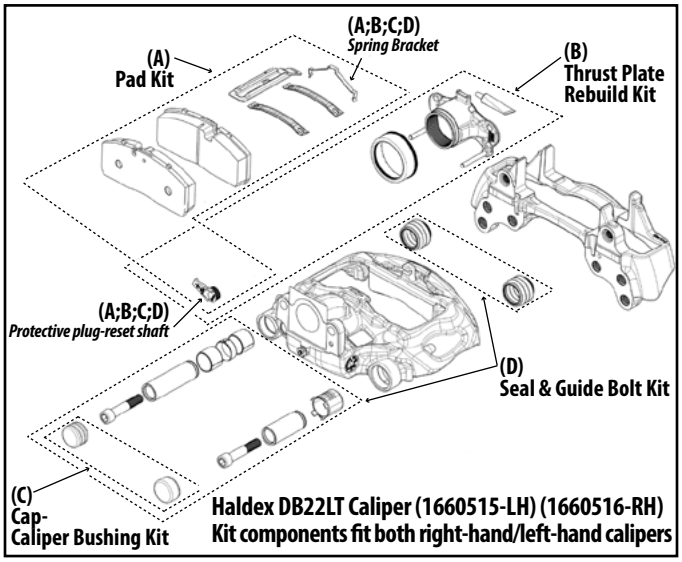

Haldex DB22LT Caliper (1660515-LH) (1660516-RH)
Kit components fit both right-hand/left-hand calipers

Diagram No.	QTY/Axle	Part No.	Item Description
A	1	1660686	Pad Kit
B	1	1660687	Thrust Plate Rebuild Kit
C	1	1660688	Cap-Caliper Bush Kit
D	1	1660689	Seal & Guide Bolt Kit

As the vehicle travels forward, the wheel rotates from the caliper's "Long Pin" (Fixed-Pin) side towards the "Short Pin" side of the caliper.

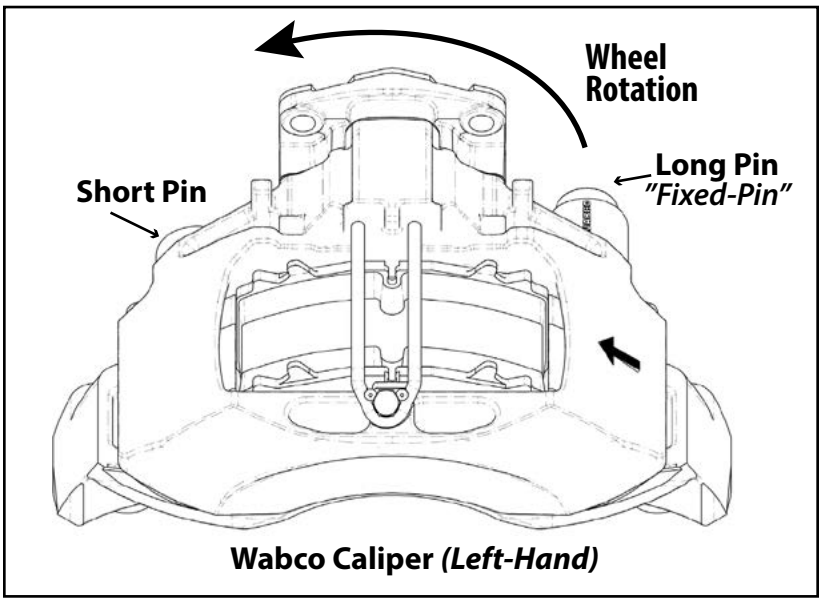

Wabco Caliper *(Left-Hand)*

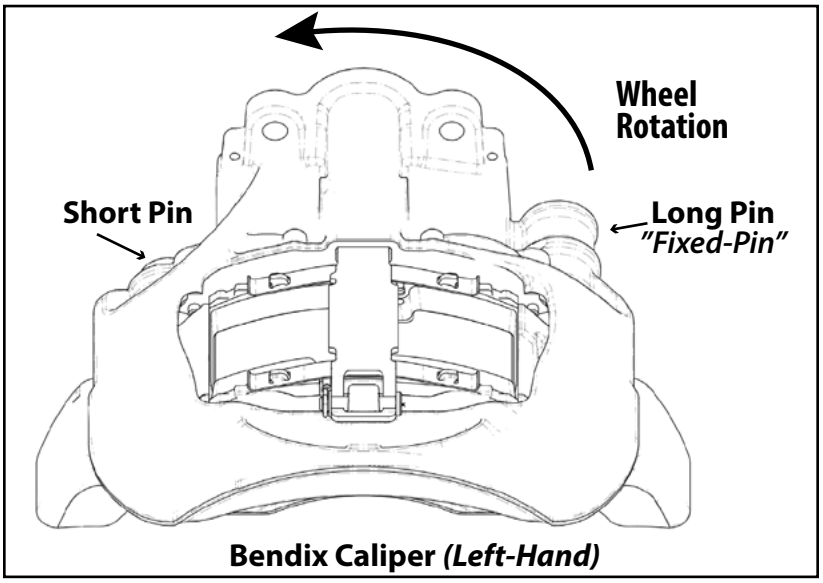

Bendix Caliper *(Left-Hand)*

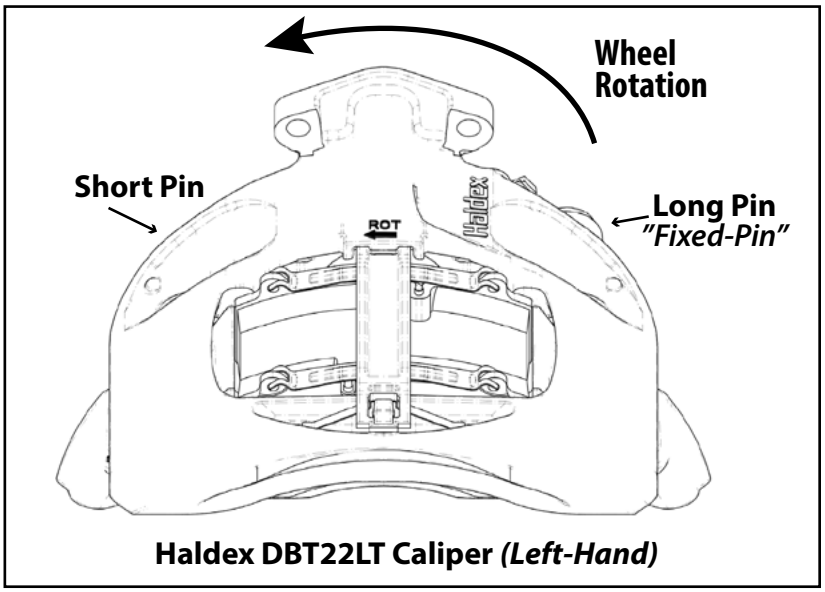

Haldex DBT22LT Caliper *(Left-Hand)*

Ridewell-Branded – 5″ Diameter Bent-Tube Axle

Drum Brake (Base-Axle Part Numbers)
165xxxx Drop-Axle
165xxxx Inverted Drop-Axle

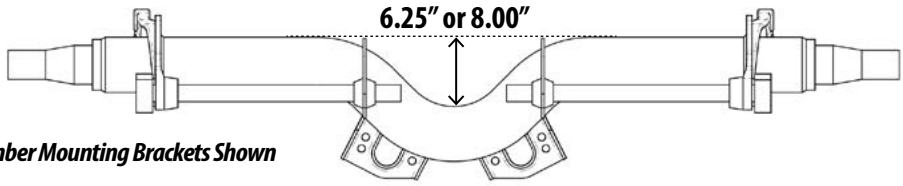

Drop-Axle (Tapered Spindle); Long Cam, Brake Chamber Mounting Brackets Shown

Air Disc Brake (Base-Axle Part Numbers)
165xxxx Drop-Axle
165xxxx Inverted Drop-Axle

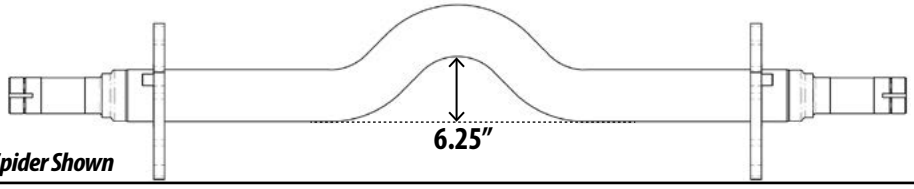

Inverted Drop-Axle (Parallel Spindle); Disc Brake Spider Shown

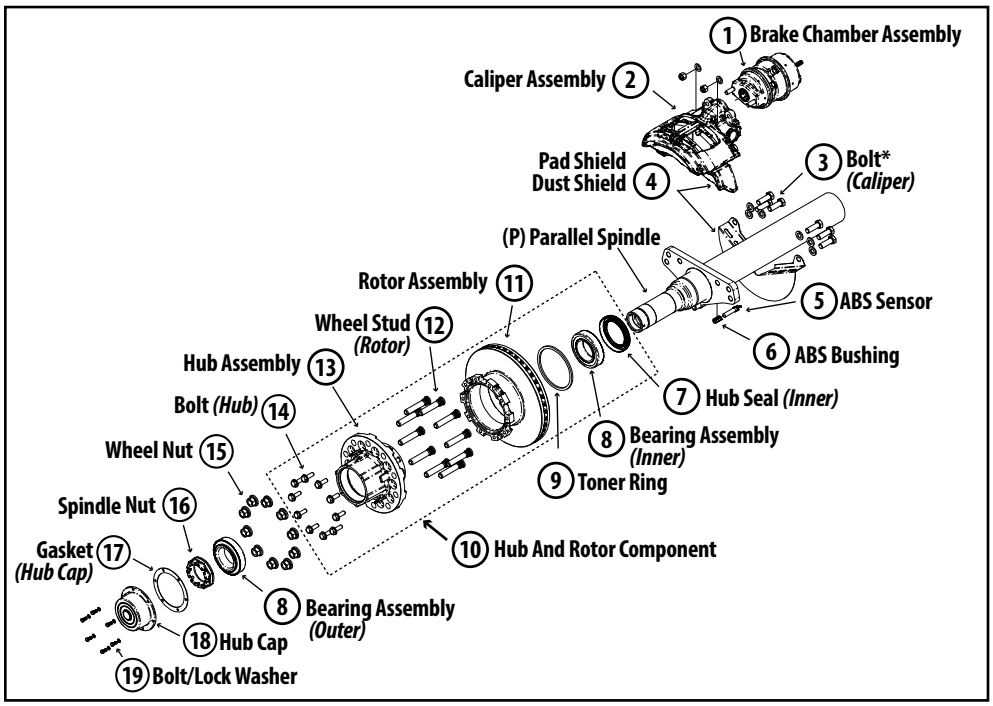

Figure 3.
Air Disc Brake Bent-Tube Axle w/ (P) Spindle

165xxxx P/N Service Parts:
- **Drop-Axle**
- **Inverted Drop-Axle**

Spindle-Type	Part Number	Bent-Tube Axle- Tube Style	Axle-Track	Wall	
(P) Parallel	1650245	6.25″ Drop-Axle	71.5″	0.591″	
	1650246	8.00″ Drop-Axle	71.5″	0.75″	
	1650389	6.25″ Inverted Drop-Axle	77.5″	0.75″	
	1650393	6.25″ Drop-Axle	77.5″	0.75″	
	1650432	6.25″ Inverted Drop-Axle	71.5″	0.75″	

Diagram Number	Quantity per Axle	Part Number	Item Description
1–14	Pages 16-17 *(22.5″ Wheel Size – Wabco, Haldex, or Bendix Caliper)*		
15	20	1660057	Wheel Nut *(See page 27)*
16	2	1660597	Spindle Nut Kit *(Castle Nut Kit-See page 27)*
17	2	1660055	Hubcap Gasket *(See page 29)*
18	2	166xxxx	Hubcap *(Lubrication Options - Oil or Hard/Semi-Fluid Grease; see page 29)*
19	12	1144206B105	(Hubcap) HHCS 5/16″ - 18NC 3/4″ length (Torque Chart-p36)
	12	1164263B100	(Hubcap) Lock Washer 5/16″ (Torque-p36)

Figure 4.
Drum Brake Bent-Tube Axle with (N) Tapered Spindle, Short Brake Cam w/ Cover:

165xxxx P/N Service Parts:
- **Inverted Drop-Axle**

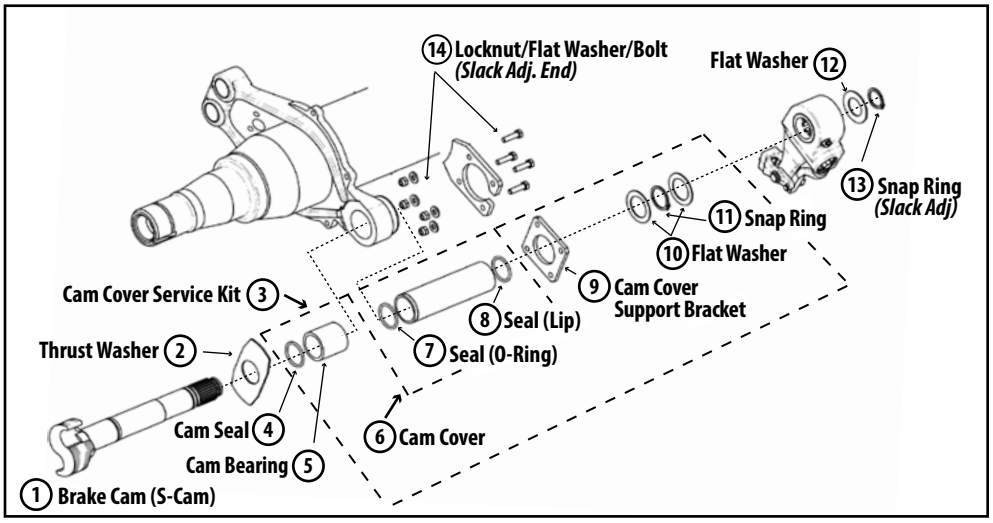

Spindle-Type	Part Number	Bent-Tube Axle-Tube Style	Axle-Track	Wall Thickness	DIAG No.	Cam Length (See pg 28)	Spline	Head-End	Ridewell Part Number	Industry Alternative Part Number
N Tapered	1650287	6.25″ Inverted Drop-Axle	77.5″	0.75″	1	11.13″	28	LH	1667591B108	—
								RH	1667591B208	—

Diagram Number	QTY/ Axle	Part Number	Item Description
2	2	1667591B043	Thrust Washer (S-Cam)
3	2	**1660387–283mm Cam Cover Service Kit**	
Included in Service Kit: 4	1	1667591B038	S-Cam - Seal (Axle Spider End)
Included in Service Kit: 5	1	1667591B039	S-Cam - Bearing (Axle Spider End)
Included in Service Kit: 6	1	1667591B049	Short Cam-Cover Assembly (169.5 mm); Bushings included
Included in Service Kit: 7	1	1660633	Seal (O-Ring) - Cam Cover (Axle Spider End)
Included in Service Kit: 8	1	1660634	Seal (Lip) - Cam Cover (Slack Adjuster End)
Included in Service Kit: 9	1	1667591B037	Support Bracket (2″ Universal) - Cam Cover
Included in Service Kit: 10	10	1667591B044	S-Cam - Spacer Washer (Slack Adjuster End)
Included in Service Kit: 11	1	1667591B009	S-Cam - Snap Ring (Slack Adjuster End)
12	2	1667591B016	S-Cam - Spacer Washer (Slack Adjuster)
13	2	1667591B017	S-Cam Snap Ring (Slack Adjuster)
14	8	1150063	Locknut-M8 (Slack Adjuster End)
	8	1140081	Bolt (HHCS)-M8x30mm (Slack Adj End)
	8	1160031	Flat Washer (Slack Adjuster End)

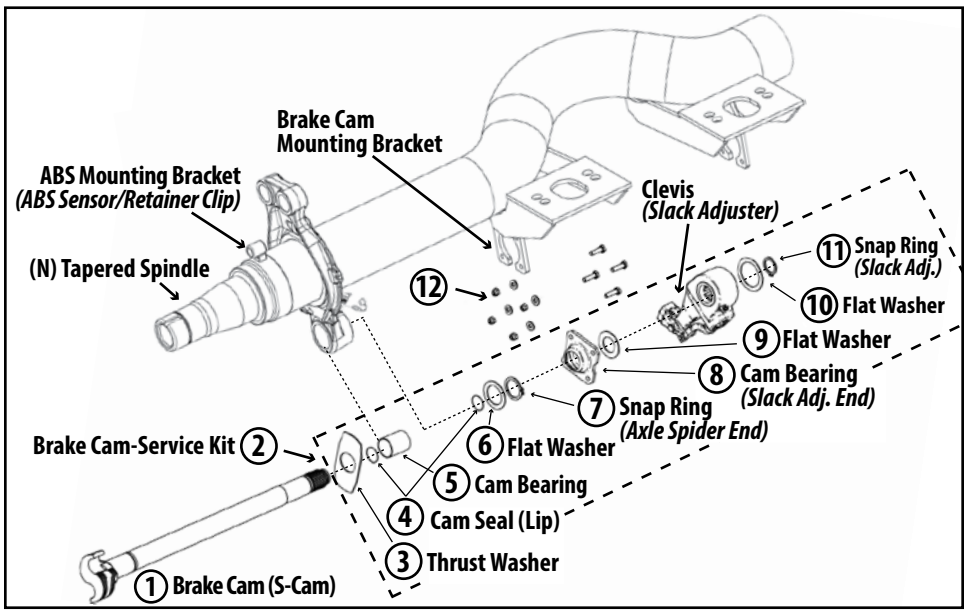

Figure 5.
Drum Brake Bent-Tube Axle with (N) Tapered Spindle, Long Brake Cam w/o Cover:

165xxxx P/N Service Parts:
- **Drop-Axle**
- **Inverted Drop-Axle**

Spindle-Type	Part Number	Bent-Tube Axle-Tube Style	Axle Track	Wall Thickness	DIAG NO.	Cam Length (See pg 28)	Spline	Head-End	Ridewell Part Number	Industry Alternative Part Number
N Tapered	1650051	6.25″ Drop-Axle	71.5″	0.591″	1	22.63″	28	LH	1667591B110	—
								RH	1667591B210	—
	1650055	8.00″ Drop-Axle	71.5″	0.75″		21.625″	28	LH	Not available	M16WKL25-216
								RH	Not available	M16WKR25-216
	1650081	6.25″ Inverted Drop-Axle	71.5″	0.75″		20.63″	28	LH	Not available	M16WKL25-206
								RH	Not available	M16WKR25-206
	1650124	6.25″ Inverted Drop-Axle	71.5″	0.75″		20.63″	28	LH	Not available	M16WKL25-206
								RH	Not available	M16WKR25-206
	1650263	6.25″ Inverted Drop-Axle	71.5″	0.75″		23.63″	28	LH	Not available	M16WKL25-235
								RH	Not available	M16WKL25-235
P Parallel	1650083	6.25″ Inverted Drop-Axle	71.5″	0.75″		20.63″	28	LH	Not available	M16WKL25-206
								RH	Not available	M16WKR25-206
	1650137	6.25″ Inverted Drop-Axle	71.5″	0.75″		20.63″	28	LH	Not available	M16WKL25-206
								RH	Not available	M16WKR25-206

	Diagram Number	QTY/ Axle	Part Number	Item Description
	2	1	**1667591B054 – (613mm) Cam Service Kit**	
Included in Service Kit	3	2	1667591B043	Thrust Washer (Axle Spider End)
	4	4	1667591B038	Lip Seal (Axle Spider End)
	5	2	1667591B039	Cam Bearing (Axle Spider End)
	6	2	1667591B014	Flat Washer (Axle Spider End)
	7	2	1667591B015	Snap Ring (Axle Spider End)
	8	2	1667591B045	Cam Bearing (Slack Adjuster End)
	9	20	1667591B044	Spacer Washer (Slack Adjuster End)
	10	2	1667591B016	Flat Washer (Slack Adjuster)
	11	2	1667591B017	Snap Ring (Slack Adjuster)
	12	8	1150063	Locknut-M8 (Slack Adjuster End)
		8	1140081	Bolt (HHCS)-M8x30mm (Slack Adj End)
		8	1160031	Flat Washer (Slack Adjuster End)

Wheel-End Components
Drum brake axle assembly shown

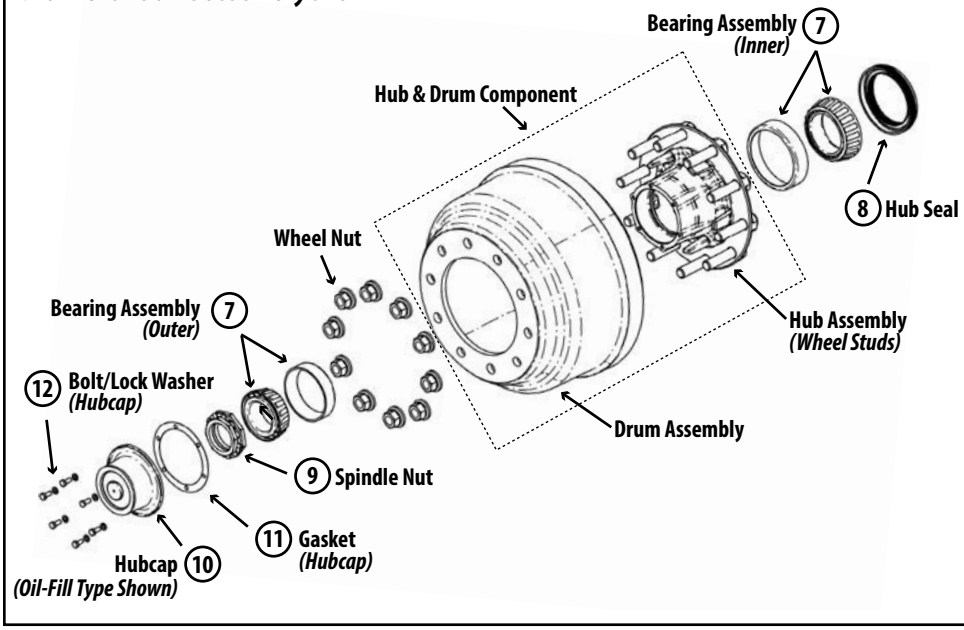

Wheel Bearing							
Diagram No.	**Spindle**	**Part Number**	**Item Description**	**Cup/Cone**	**Location**	**Manufacturer**	**Industry Number**
7	N	1664206B008	Bearing Assembly	Cone	Inner	VNC	HM218248
		1664206B009	Bearing Assembly		Outer	VNC	HM212049
		1664206B041	Bearing Assembly		Inner	Hyatt	HM218248
		1664206B042	Bearing Assembly		Outer	Hyatt	HM212049
		1664206B028	Bearing Assembly		Inner	Stemco	KHM218248
		1664206B027	Bearing Assembly		Outer	Stemco	KHM212049
		1664206B032	Bearing Race	Cup	Inner	VNC	HM218210
		1664206B033	Bearing Race		Outer	VNC	HM212011
	P	1660048	Bearing Assembly	Cone	Inner/Outer	VNC	HM518445
		1660304	Bearing Assembly		Inner/Outer	Stemco	KHM518445
		1660502	Bearing Assembly		Inner/Outer	Hyatt	HM518445
		1660527	Bearing Assembly		Inner/Outer	Timken	HM518445
		1660397	Bearing Race	Cup	Inner/Outer	VNC	HM518410

Hub Seal					
Diagram No.	**Spindle**	**Part Number**	**Item Description - Brand Name**	**Manufacturer**	**MFR Part Number**
8	N	1667537B004	Guardian HP	Stemco	307-0743
		1664206B026	Discover		373-0243
		1660458	Gold PTFE	National	M380025
	P	1660276	Guardian HP	Stemco	307-0723
		1660215	Discover		373-0223
		1660494	Gold PTFE	National	M386590T

Wheel-End Components
Drum brake axle assembly shown

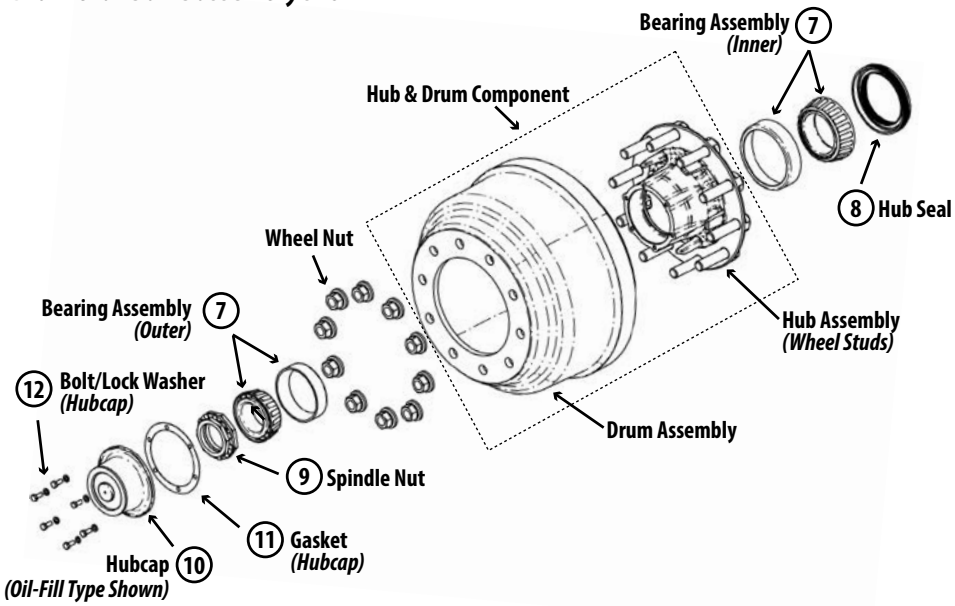

Spindle Nut				
Diagram No.	Spindle Type	QTY/Axle	Part Number	Item Description
9	P	2	**1660597 – Spindle Nut Kit**	
		1	1660051	Castle Nut
		1	1660052	Washer
		1	1660373	Cotter pin
		1	1660366	Spindle Nut Kit (Meritor - 4 pcs w/ set screw)
		2	1660493	Spindle Nut (ConMet PreSet; PreSet Plus - #10080657)
		2	1660629	Spindle Nut (Stemco - Zip-Torq)
	N	2	**1664206B014 – Spindle Nut Kit**	
		1	1664206B035	Inner spindle nut
		1	1664206B034	Lock Washer
		1	1664206B036	Outer nut
		1	1664206B037	Tabbed Lock Washer
		2	1660453	Spindle Nut (ConMet PreSet; PreSet Plus - #10045896)
		2	1660630	Spindle Nut (Stemco - Zip-Torq)

Wheel Nut		
FLANGED	Part Number	Item Description
	1660057	Flanged Wheel Nut – M22 x 1.5 x 33 (1.30″ x 1.22″)
	1660226	Flanged Wheel Nut – M18 x 1.5 (1.06″ x 0.97″)
BALL SEAT	1664203B003	Inner Wheel Nut #105988 3.06 – ALUM Wheel (3/4″-16NF; Inner RH)
	1664203B004	Inner Wheel Nut #105989 3.06 – ALUM Wheel (3/4″-16NF; Inner LH)
	1664203B009	Inner Wheel Nut #001-5549L 2.24 – Steel Wheel (3/4″-16NF; Inner LH)
	1664203B010	Inner Wheel Nut #001-5549R 2.24 – Steel Wheel (3/4″-16NF; Inner RH)
	1664203B007	Outer Wheel Nut #001-5552L (1 1/8″-16; Outer KIC™)
	1664203B008	Outer Wheel Nut #001-5552R (1 1/8″-16; Outer KIC™)

Q+ Brake Cams – 16.5″ x 7.0″ Brake Size

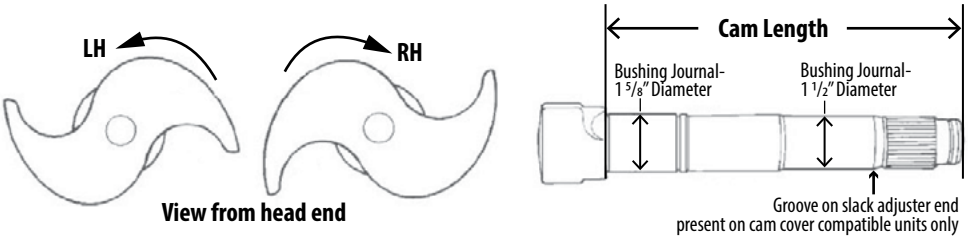

LH and RH indicates the direction of cam rotation; NOT the side of the vehicle where the cam is installed. (LH = Counterclockwise) (RH = Clockwise)

Cam Length (inches)	Cam Cover Compatible?	Spline	Head End	Part Number	Industry Alternative Part Number
8.750		28	LH	1667591B112	M16WKL25-086N
			RH	1667591B212	M16WKR25-086N
11.125	YES (Pg 10–Short Cam)	28	LH	1667591B108	
			RH	1667591B208	
13.750		28	LH	1667591B111	M16WKL25-136N
			RH	1667591B211	M16WKR25-136N
17.516		28	LH	Not available	M16WKL25-175
			RH	Not available	M16WKR25-175
20.625		28	LH	Not available	M16WKL25-206
			RH	Not available	M16WKR25-206
21.125		10	LH	1667511B100	M16WKL10-211
			RH	1667511B200	M16WKR10-211
21.125		28	LH	1667591B102	M16WKL25-211
			RH	1667591B202	M16WKR25-211
21.380		28	LH	Not available	M16WKL25-214
			RH	Not available	M16WKR25-214
21.625		28	LH	Not available	M16WKL25-216
			RH	Not available	M16WKR25-216
22.625		28	LH	1667591B110	
			RH	1667591B210	
23.000		28	LH	1667591B101	M16WKL25-230
			RH	1667591B201	M16WKR25-230
23.375		28	LH	Not available	M16WKL25-234
			RH	Not available	M16WKR25-234
23.625		28	LH	Not Available	M16WKL25-235
			RH	Not Available	M16WKR25-235
23.750		28	LH	1667591B103	M16WKL25-236
			RH	1667591B203	M16WKR25-236
24.125		28	LH	1667591B104	
			RH	1667591B204	
24.125		10	LH	1667591B105	
			RH	1667591B205	
24.125	YES (Pg 9–Long Cam)	28	LH	1667591B106	
			RH	1667591B206	
26.500		28	LH	Not available	M16WKL25-265
			RH	Not available	M16WKR25-265
27.563		28	LH	Not available	M16WKL25-275
			RH	Not available	M16WKR25-275
29.531	YES Call Customer Service	28	LH	1667591B109	
			RH	1667591B209	

Wheel-End Components
Drum brake axle assembly shown

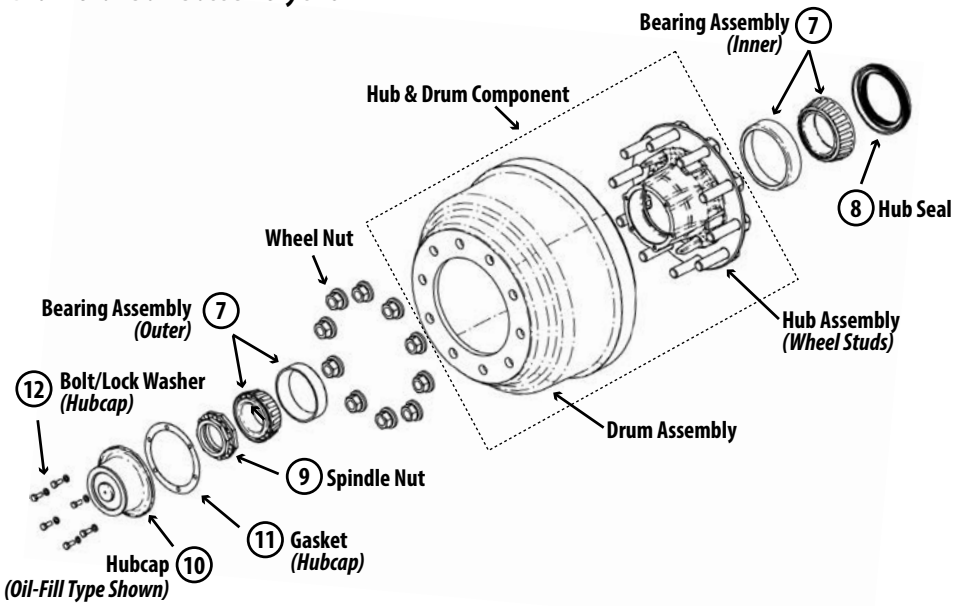

Hubcap									
Diagram No.	Spindle Type	QTY/Axle	Part Number	Lubrication Type	Auto Tire Inflation	Side-Fill Port	Vent-Type	Manuf.	Manuf. Part Number
10	N	2	1664206B006	Oil		Yes	Standard	Stemco	343-4009
			1664206B018	Oil		No	Standard		340-4009
			1660346	Oil		Yes	Sentinel		348-4009
			1664206B040	Oil		Yes	ESP Plug		353-4009
			1660128	Oil	P.S.I.	Yes			343-4370
			1664206B029	Hard/S-F Grease		No	Sentinel		349-4009
			1660155	Hard/S-F Grease		No	Duckbill		352-4009
			1660375	Hard/S-F Grease	P.S.I.	No			340-4370
11	N	2	1664206B007	Gasket				Stemco	330-3009
10	P	2	1660054	Oil		Yes	Standard	Stemco	343-4195
			1660341	Oil		Yes	Sentinel		348-4195
			1660214	Oil	P.S.I.	Yes			343-4372
			1660305	Hard/S-F Grease		No	Sentinel		349-4195
			1660435	Hard/S-F Grease		No	Duckbill		352-4195
			1660238	Hard/S-F Grease	P.S.I.	No			343-4372
11	P	2	1660055	Gasket				Stemco	330-3118

Diagram No.	Spindle Type	QTY/Axle	Part Number	Item Description
12	—	12	1144206B105	Bolt (HHCS) 5/16″-18NC 3/4″LG (Torque Chart p36)
	—	12	1164263B100	(Hubcap) Lock Washer 5/16″(Torque-pg 36)

Pressure Systems International (P.S.I.®) ThermALERT™ *www.psitireinflation.com/resources*	
Automatic Tire Inflation System – Axle Preparation Options	
Basic (1-Hole)	One 1/8" NPT hole drilled and tapped into top center of axle.* Includes Spindle Plug.
Basic (3-Hole)	Three 1/4" NPT holes drilled and tapped into top of axle (10" spacing).* Includes Spindle Plugs.
Axle Fully Prepped	Basic (1-hole) axle preparation plus wheel-end component drill/tap and ATIS air-fittings installation. NOTE: Air system connection hoses not included.
**Note: Do not use a drill for tapping the axle. The use of a drill can lead to breaking the tap or the hole threads running too deep inside the axle for proper installation.*	

Automatic Tire Inflation System – Wheel-End Components
(Dual-Tire Configuration Shown)

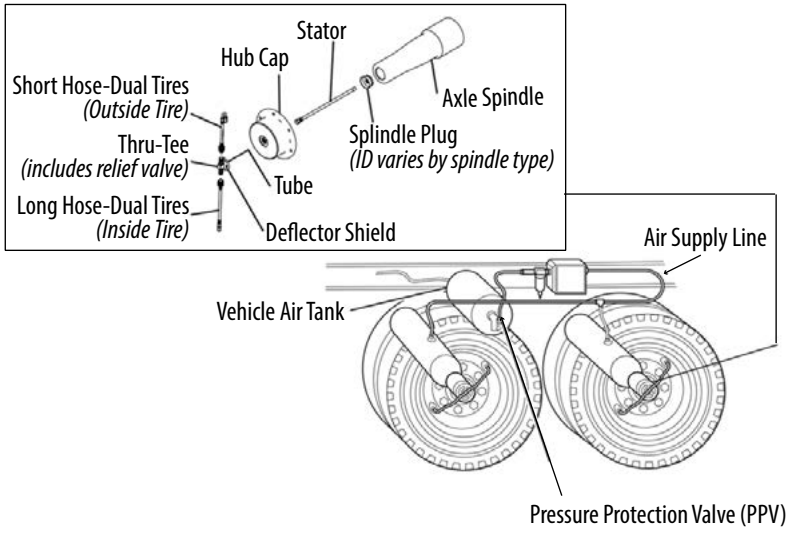

Spindle Type/ID	SpindlePlug Part No.	SpindleNut (See pg 27)	Stator Part No.	Hubcap Part No.	Type of Lube	Thru Tee (Dual Tire) Thru Tee (Single Tire)
Tapered (N) - 1.75"	1660263	1664206B014	1660130	1660128	Oil	1660240 1660142
				1660375	Grease	1660240 1660142
Parallel (P) - 2.75"	1660239	1660336		1660214	Oil	1660240 1660142
				1660238	Grease	1660240 1660142

An automatic tire inflation system (ATIS) is designed to monitor and maintain the correct air pressure inside the vehicle tires.

ATIS Operation

The automatic tire inflation system redirects presuurized air from the vehicle's air system to the tires in order to maintain the proper air pressure. An ATIS monitor system reports real-time tire-pressure information to the driver with a low-pressure warning light.

Advantages of an ATIS

Extended Tire Life: Under-inflated tires are the main cause of tire failure and contribute to tire disintegration, heat buildup, ply separation and sidewall/casing breakdowns.

In addition, tires that are properly inflated improve fuel economy while adding greater stability, handling and braking efficiencies for increased vehicle safety on the road.

Contact Ridewell Customer Service for the axle and wheel-end preparation needed for a single- or dual-wheel ATIS system.

Recommended Service Intervals

Ridewell Suspensions recommends these minimum service intervals for standard duty, on-highway usage suspension applications.

More frequent intervals may be needed and are recommended for heavier duty applications.

Daily/Pre-Trip Inspections

___ Check tires for proper inflation, damage/excessive wear.

___ Check oil-level in wheel hub. Inspect wheel-ends for obvious signs of lubricant leakage. Check suspension/wheel ends for missing components.

___ Visually inspect suspension structure for damage/excessive wear.

___ Check for loose/missing bolts/nuts. Check suspension components for irregular movement.

___ Make sure air controls are operating properly. Drain all moisture from air reservoirs.

First 6,000 miles of use

___ Torque all component bolts/nuts to specifications
(Refer to Manufacturer's Specifications).
NOTE: Do not re-torque shear-type pivot bolt.

Every 12,000 miles of use

___ Inspect air springs for damage/excessive wear. Torque air spring bolts/nuts to Manufacturer's Specifications.

___ Check air lines and connections for leaks.

Ridewell suggests these Technology & Maintenance Council (TMC) Recommended Maintenance Practices:

RP 222	User's Guide to Wheels and Rims
RP 604	Brake Chambers for Air-Braked Vehicles
RP 607	Preventive Maintenance-S-Cam Foundation Brakes
RP 608	Brake Drums and Rotors
RP 609	Brake Adjuster Removal; Installation;Maintenance
RP 618	Wheel Bearing Adjustment Procedure
RP 619	Air System Inspection Procedure
RP 622	Wheel Seal/Bearing Removal, Installation-Maintenance
RP 631	Recommendations for Wheel End Lubrication
RP 651	Steer Axle Maintenance Guidelines
RP 652	Service and Inspection of Air Disc Brakes
RP 656	Hub and Spoke Wheel Fastener Maintenance
RP 708	Trailer Axle Alignment
RP 728	Trailer Axle Maintenance
RP 1503	Brake Maintenance - Severe Vocational Applications
RP 1506	Torque Rod MAINT Guidelines - Vocational Vehicles
RP 1509	Drive-Axle Suspension Guidelines - Vocational Vehicles

Every 50,000 miles of use

___ Torque all component bolts/nuts to specifications
(Manufacturer's Specifications.).

___ Lube camshaft bushings/brake adjusters.

Annually/100,000 miles of use

___ Inspect pivot connection for worn pivot bushings and wear washers. Replace components as necessary.

___ Torque suspension components to OEM torque specifications.

___ Check arm beam-to-axle welds.

Check lubrication level in wheel ends:

___ 1) Oil-Filled Wheel Ends:
Refill/Replace lubricant as needed
(RP 631 "100K/Annual Inspection").

___ 2) Semi-Fluid Grease:
Pull outer bearing and visually inspect lubrication level. Replace as needed
(RP 631 "Level 3 Lubrication Level Inspection")
(RP 618 "Wheel Bearing Adjustment").

___ Check air lines/connections for leaks.

___ Check disc/drum brake air chambers and slack adjusters.

___ Inspect brake rollers, roller shafts, anchor pins and bushings. Replace if necessary.

___ Check shoes for bent shoe ribs, cracks in shoe table welds or ribs, and elongated rivet holes. Replace shoes if necessary.

CAUTION Failure to torque suspension components to specifications can result in suspension failure and void the warranty.

S-CAM LUBRICATION

Drum Brake Cams (S-Cams) should be inspected and lubricated monthly. More frequent service intervals may be needed in some applications.
NOTE: Extended wear or damage in the brake cam bushing area as well as flat spots on the cam head and-or distorted splines will require a cam replacement.

- Clean the grease fitting and surrounding area before lubricating any vehicle component. Lubricate S-Cam support grease fittings with #2 EP NLGI chassis lube.
- Standard Cam Axle - Add lubricant to both grease fittings until fresh grease can be seen purging from each bushing cavity. Wipe away excess grease.
- Covered-Cam Axle - Add lubricant to the spider-end grease fitting until grease is seen purging from the slack adjuster-end of cam cover. Wipe away excess grease.

Refer to TMC Recommended Practice 631 – "Recommendations for Wheel-End Lubrication"

Lubricant Type	Part Number	Item Description
Mineral Oil	380008G	CITGO MP Gear Oils - 80W-90
Synthetic Oil	1980006	SHELL Spirax S6 AXRME API GL-5 - 75W-90
Synthetic Semi-Fluid Grease	1980011	CHEVRON Delo® Syn-Grease™ SFE EP
Synthetic Hard-Pack Grease	1980007	CITGO Mystik JT-6 NLGI-2 GC-LB

(Hubcap options for wheel-end lubricants listed on page 29)

Refer to TMC's Recommended Practice 618 - "Wheel Bearing Adjustment Procedure." The procedure should obtain a verifiable wheel bearing end-play between 0.001" - 0.005" (0.025 mm to 0.13 mm). TMC's Wheel Bearing Adjustment Procedure is for manually adjusted wheel ends. The procedure is not applicable to preset or unitized wheel ends.

⚠CAUTION For wheel bearing adjustments on manually adjusted wheel ends, the optimum condition for measuring end-play is with the tires/wheels and brake drum removed from the hub. Always support the vehicle with stands; do not work under a unit supported by only a jack. Block the wheels and make sure vehicle cannot roll before releasing the brakes.

NOTE: Do not use an impact wrench to tighten or loosen spindle nuts during wheel bearing adjustment.

Double Adjusting Nut System (Figure 6)

1. Lubricate bearing with the same type of lubricant used in the hub assembly.
2. While rotating the wheel, torque adjusting nut (A) to 200 ft-lb (271 N·m).
3. Back off the adjusting nut (A) one full turn from the bearing.
4. While rotating the wheel, tighten adjusting nut to final torque – 50 ft-lb (68 N·m).
5. Back off the adjusting nut l/4-to-1/3 turn. Install lock washer (B) using nearest hole.
6. Install outer jam-nut (C). Torque to 200-300 ft-lb (271-407 N·m).
7. Check end-play (0.001" to 0.005" [0.025 mm to 0.13 mm]).

Verify that the wheel rotates freely when adjustment is completed.

Single Adjusting Nut System (Figure 7)

1. Lubricate bearing with the same type of lubricant used in the hub assembly.
2. Install lock washer (B).
3. While rotating the wheel, torque adjusting nut (A) to 200 ft-lb (271 N·m).
4. Back off the adjusting nut (A) one full turn from the bearing.
5. While rotating the wheel, tighten adjusting nut to final torque – 50 ft-lb (68 N·m).
6. Back off the adjusting nut l/6-to-1/4 turn to the nearest locking hole.
7. Install cotter pin.
8. Check end-play (0.001" to 0.005" [0.025 mm to 0.13 mm]).

Verify the wheel rotates freely when adjustment is completed.

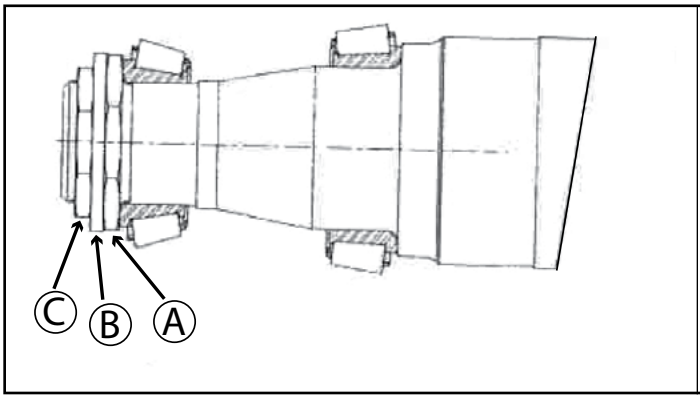

Figure 6.
Double Adjusting Nut System

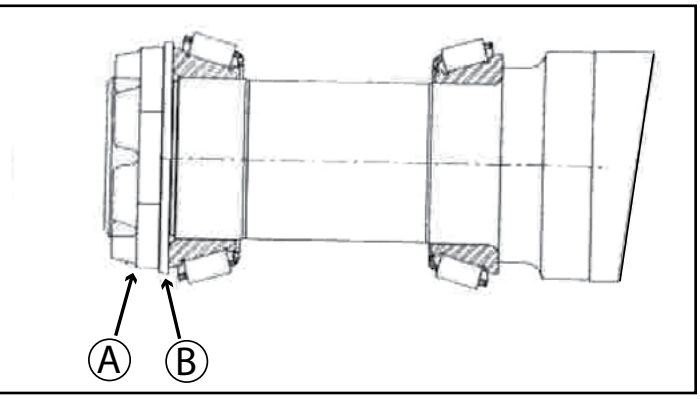

Figure 7.
Single Adjusting Nut System

Five-Inch (Standard Axle)

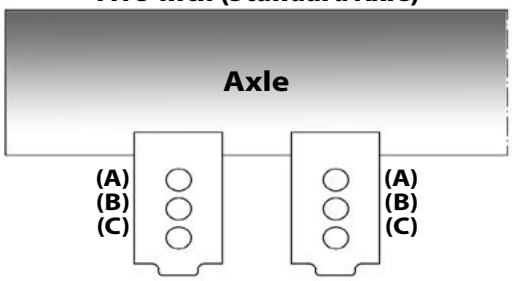

Brake Chamber Mount Hole Patterns

Brake Size	16.5 x 7.0″	12.25 x 7.5″
Hole-Code	Slack Adjuster Length	Slack Adjuster Length
A – A	5″	—
A – B	5.5″	5″
B – B	6″	5.5″
B – C	—	6″

266 Large Diameter Axle (LDA)

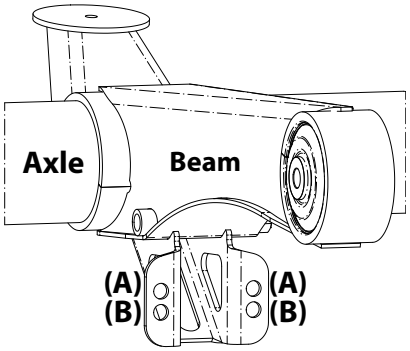

Brake Chamber Mount Hole Patterns

Brake Size	16.5″ x 7.0″
Hole – Code	Slack Adjuster Length
A – A	—
A –B	5.5″
B – B	6″

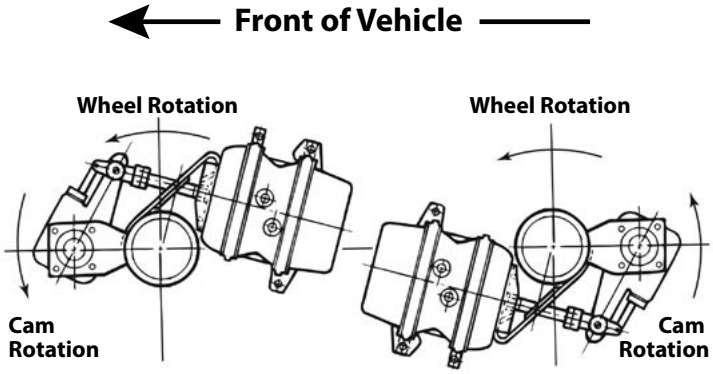

Push-Rod Above Axle-Cam in Front

Push-Rod Below Axle-Cam in Rear

Install axle assembly so that, when the brakes are activated, the camshaft rotates in the same direction as the wheels when vehicle moves forward.

Opposite rotation of the camshafts can cause vibrations that damage components such as the air chambers and chamber brackets attached to axle.

There are two recommended configurations for axle installations:

- Cams front and air chamber push-rod above the axle.
- Cams rear and air chamber push-rod below the axle.

The decision on which axle assembly configuration to use is based on obtaining adequate clearance between the axle and other vehicle components, maximizing ground clearance, or locating components for maintenance access.

Disc Brake Chamber Part Number - Listed by ports location on suspension after standard installation*

(Suspension Model (Type) Part Number starts with the number "2" or "300" followed by numbers/characters that group the suspension into a product family. The "X" symbol is used as a placeholder (wild card) for both numbers and characters in the Suspension Model Part Number.)

Chamber Port Away from Axle-Long Pin Side

215xxxx	**Truck and Trailer**	
266x2xxxxDB	**Low Mount (Underslung)**	
Chamber Size	**P/N-Driver's Side**	**P/N-Curb Side**
**T-16	1660731	
T-18	1660457	1660456
T-20	1660434	1660433
T-24	1660205	1660206
16/24	1660581	1660580
18/24	1660728	1660729
18/24	1660567	1660566
20/24	1660351	1660352
24/24	1660203	1660204

Chamber Port Away From Axle-Short Pin Side

2400209	**Yoke**	
245xxxx	**Truck and Trailer**	
Chamber Size	**P/N-Driver's Side**	**P/N-Curb Side**
**T-16	1660731	
T-18	1660456	1660457
T-20	1660433	1660434
T-24	1660206	1660205
16/24	1660580	1660581
18/24	1660729	1660728
18/24	1660566	1660567
20/24	1660352	1660351
24/24	1660204	1660203

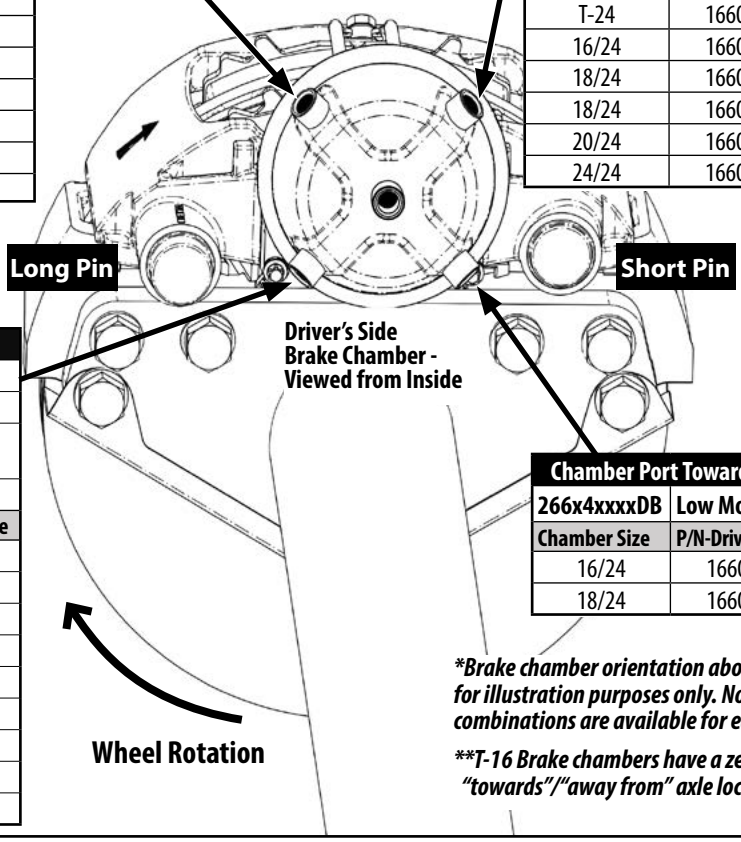

Chamber Port Towards Axle-Long Pin Side

240xxxx	**Overslung;Underslung;Yoke**	
260xxxx/200xxxx	**Overslung**	
266x1xxxxDB **266x3xxxxDB**	**Overslung**	
233xxxx	**Truck and Trailer**	
Chamber Size	**P/N-Driver's Side**	**P/N-Curb Side**
**T-16	1660731	
T-18	1660456	1660457
T-20	1660433	1660434
T-24	1660206	1660205
16/24	1660580	1660581
18/24	1660729	1660728
18/24	1660566	1660567
20/24	1660352	1660351
24/24	1660204	1660203

Chamber Port Towards Axle-Short Pin Side

266x4xxxxDB	**Low Mount (Underslung)**	
Chamber Size	**P/N-Driver's Side**	**P/N-Curb Side**
16/24	1660581	1660580
18/24	1660728	1660729

***Brake chamber orientation above the axle is shown for illustration purposes only. Not all ADB chamber combinations are available for each suspension type.**

***T-16 Brake chambers have a zero-degree port – "towards"/"away from" axle locations do not apply.**

Replacement of the disc brake chamber and the integration into the vehicle's air system depends upon the side of the axle where it's installed and the brake chamber ports location - either towards or away from the axle body.

In some cases, the correct brake assembly for the left-hand (driver's side) or the right-hand (curb side) side of the axle will be indicated by an arrow on the caliper.

The brake disc's direction of rotation during forward driving can be found by looking for the Long ("Fixed Position") Pin on the caliper assembly. The wheel rotates forward (towards) the long pin to the Short ("Floating Position") Pin.

In addition to showing wheel rotation, the location of the ADB chamber ports in relation to the axle (towards or away) will be indicated by the short or long pin (side) of the brake caliper.

Refer to the American Trucking Associations Technology & Maintenance Council (TMC) Recommended Maintenance Practices *"(604) Brake Chambers for Air-Braked Vehicles"* and *"(652) Service and Inspection of Air Disc Brakes"* for additional maintenance/replacement information.

Component Type	Component Description	foot-pound	Newton-meter
Spindle Nut	*Refer to American Trucking Association Technology & Maintenance Council (TMC) Recommended Maintenance Practice #618 - Wheel Bearing Adjustment Procedure.*		
Wheel Nut *Hub-Piloted – Flanged* *Stud-Piloted – Ball-Seat*	M22 x 1.5 x 33 (1.30" x 1.22") 3/4" x 16	450-500 ft-lb 450-500 ft-lb	610-678 N-m 610-678 N-m
Brake Chamber Mounting Fastener	5/8" Mounting Hardware	110-150 ft-lb	149-203 N-m
Auto. Slack Adjuster-to-Push Rod	Jam Nut – pushrod-to-clevis	(5/8-18) 400 in-lb	45.19 N-m
Air Disc Brake– **Hub-to-Rotor Fastener**	**Pattern One** *(Discontinued)* Cast Iron Hub	229-258 ft-lb	310-350 N-m
	Pattern Two Gunite® Cast Iron Hub (HHCS-5/8x11)	210-230 ft-lb	285-312 N-m
	KIC™ Cast Iron Hub (HHCS-M16)	220 ±10 ft-lb	298 ±14 N-m
	ConMet® Alum. Hub (Locknut required)	180-210 ft-lb	244-285 N-m
	Pattern Three/Four Wabco PAN™ 19	100-103 ft-lb	135-140 N-m
	Pattern Five Wabco PAN™ 17	180-200 ft-lb	244-271 N-m
ADB Caliper – Mounting Fastener	**Pattern One** *(Discontinued)* Wabco PAN™ 22 (HHCS-M16)	199-229 ft-lb	270-310 N-m
	Pattern Two Wabco PAN™ 22 (HHCS-M20)	342-395 ft-lb	464-536 N-m
	Bendix ADB22X™/ADB22X-LT™ (HHCS-M20)	Pre-Torque: 20-60 ft-lb Final: 350-400 ft-lb	27-81 N-m 475-542 N-m
	Haldex DBT22LT (HHCS-M20)	Pre-Torque: 145 ft-lb Final: 390 ±25 ft-lb	200 N-m 530 ±34 N-m
	Pattern Three/Four Wabco PAN™ 19 (HHCS-M16)	199-229 ft-lb	270-310 N-m
	Pattern Five Wabco PAN™ 17 (HHCS-M14)	118-148 ft-lb	160-200 N-m
Hubcap Bolt CAUTION Do not use motor-driven screw or torque tools on hubcap fasteners.	HHCS 5/16 18NC – 3/4" long (Lock Washer)	12-16 ft-lb (144-192 in-lb)	16-22 N-m
Hubcap - Side-Fill Plug	3/8" Plug	5-9 ft-lb	7-12 N-m

CAUTION ***Failure to install/maintain fasteners at torque specifications could result in suspension failure and voided warranty. Refer to the original equipment manufacturer for complete torque specifications.***

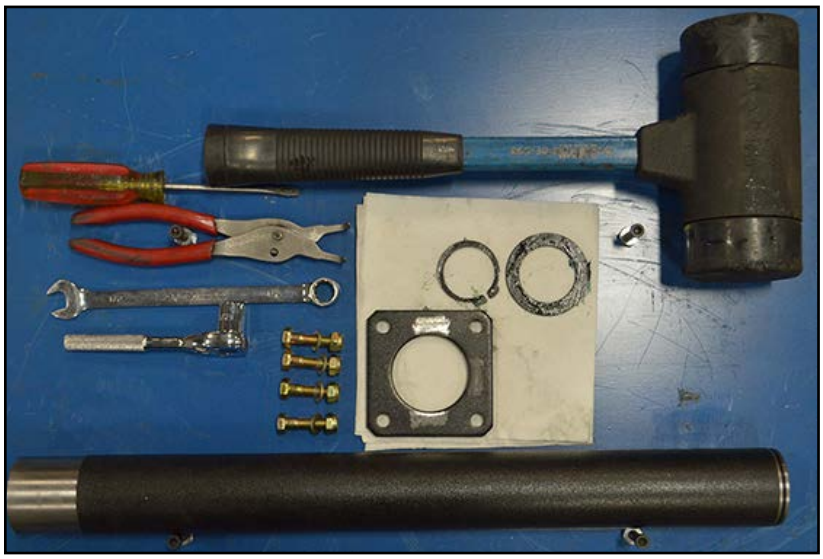

Drum Brake Axle - Cam Cover Service Kit includes the brake cam enclosure, the brake cam support bracket and other hardware components to replace one cam cover.

Trailer Preparation

Park trailer on level surface. Set trailer parking brakes. Chock wheels on the axle that is not being raised.

Disconnect linkage from the height control valve(s), if necessary. Exhaust all air from the air system.

⚠CAUTION Failure to provide support, chock vehicle's wheels or exhaust the air system could allow vehicle movement that could result in serious injury.

Drum Brake Axle - Cam Enclosure Replacement

All work should be completed by a properly trained technician using the proper tools and safe work procedures.
Ridewell Suspensions recommends the cam enclosure be replaced on both sides of the drum brake axle at the same time.

1. Raise vehicle (axle) on the side of the cam cover to be replaced until wheel(s) clear the surface. Support with safety stands.
2. Remove the tire/wheel assembly and the hub/drum components to access the axle spider. Remove the slack adjuster/clevis assembly and brake components to access the inboard brake cam mounting bracket.
3. Use snap-ring pliers and a flat-head screwdriver to remove the snap-ring and flat washer(s) from the splined end of the brake cam (slack adjuster end).
4. Remove the bolts; flat washers; and, locknuts holding the Cam Cover Support Bracket to the Brake Cam Mounting Bracket.
   NOTE: Inspect mounting hardware for damage. Replace components as necessary.
5. Tap on the splined end of the brake cam with a rubber mallet to loosen.
   Pull brake cam out from the outboard side of cam enclosure. Inspect brake cam for damage. Replace if necessary.

Continued on next page

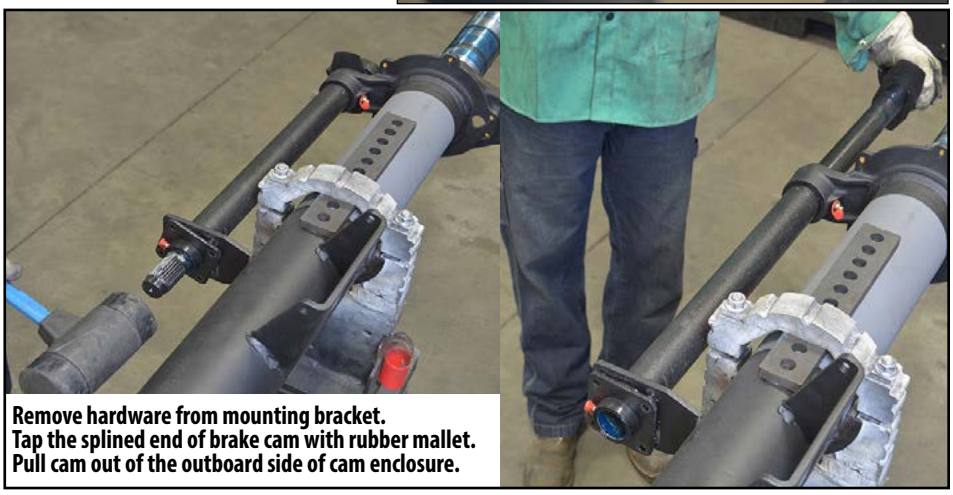

**Remove hardware from mounting bracket.
Tap the splined end of brake cam with rubber mallet.
Pull cam out of the outboard side of cam enclosure.**

Continued from previous page

6. Remove cam cover from mounting brackets. Inspect O-Ring Seal and Lip Seal for damage/excessive wear. Replace as necessary.
7. Inspect thrust washer, cam bearing, outboard cam seal and inside the axle spider for damage. Replace components as necessary.
8. Welding preparation - Grind away a small amount of paint on three (3) sides of the hole in the cam cover support bracket.
9. Place the cover support bracket on the end of cam cover with lip seal. Rotate the bracket so that one weld area is on the outside of mounting bracket; away from the axle.
10. Insert the ground (shiny) end of cam cover through the inboard side of the mounting bracket into the bearing inside the axle spider. Hold the cam cover support bracket against the mounting bracket. Tap the inboard side of the cam cover with rubber mallet to firmly seat cover inside the axle spider.
11. Bolt the cam cover support bracket to the mounting bracket.
12. Push the brake cam through the outboard opening of cam cover until the groove on the splined end of cover appears on inboard side of the cam cover support bracket.
13. Thread flat washer over splined end of cam until it rests against the end of the cam cover.
14. Push snap ring onto splined end of cam until it rests against groove. Use flat head screwdiver to push snap ring into groove.
15. Tack-weld cam cover to the cover support bracket on the top, bottom and the bracket side that is away from the axle.
16. Lubricate brake cam using the axle spider grease fitting. Add grease until grease purges out the slack adjuster side of the cam cover support bracket. Wipe away excess.
17. Reattach brake components. Reassemble hub/drum assembly. Reattach any other wheel-end components that were removed.
18. Replace tire/wheel assembly. Raise vehicle and remove support stands. Lower vehicle to ground.

Repeat brake cam cover replacement procedure on the other side of axle.

Inspect the cam bearing (inside axle spider); the cam bearing seal; and, the thrust washer for damage.
Replace components as necessary.

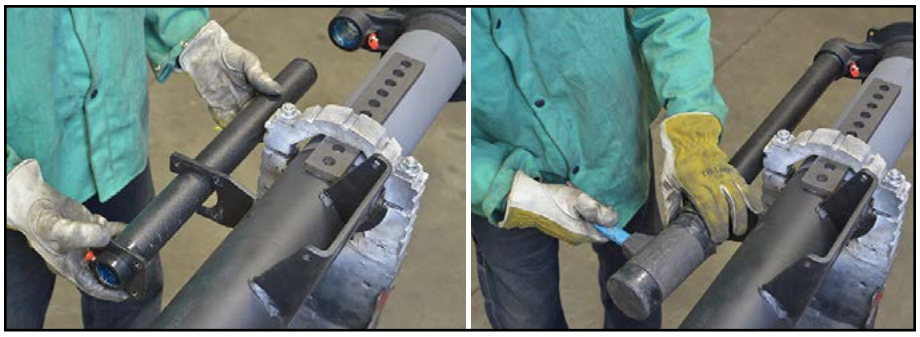

Insert splined end of cam through outboard side of cam enclosure.

Secure cam with a flat washer and snap ring on the ridged end of cam.

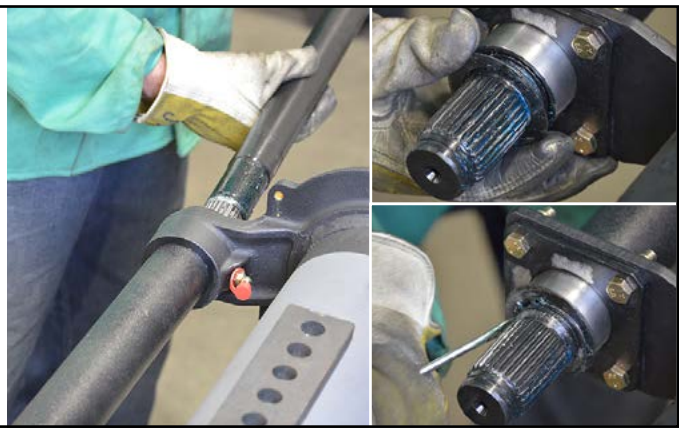

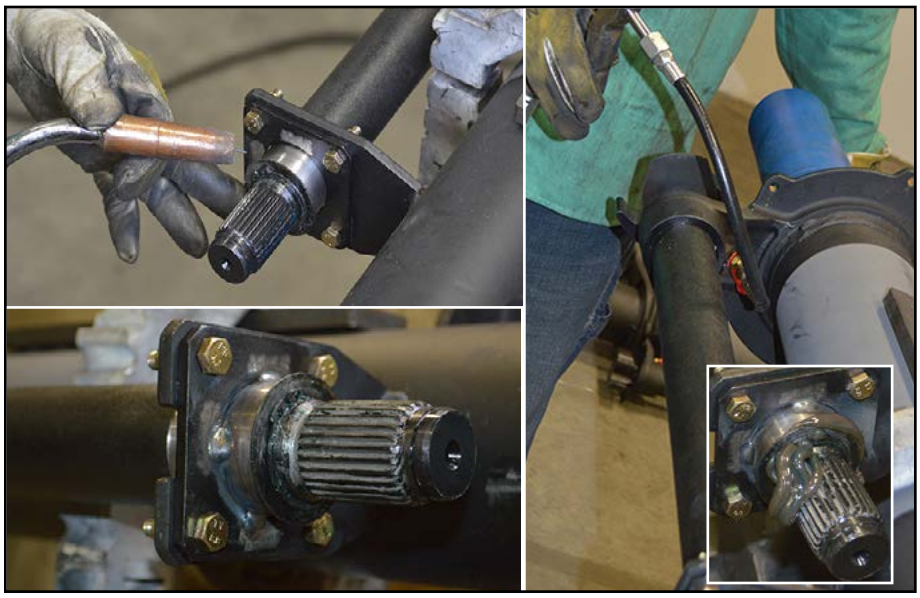

Terms and coverage in this warranty apply only to the United States and Canada.

Ridewell Suspensions warrants the suspension systems manufactured by it to be free of defects in material and workmanship. Warranty coverage applies only to suspensions that have been properly installed, maintained and operated within the rated capacity and recommended application of the suspension. The responsibility for warranty coverage is limited to the repair/replacement of suspension parts. The liability for coverage of purchased components is limited to the original warranty coverage extended by the manufacturer of the purchased part.

All work under warranty must have prior written approval from the Ridewell warranty department. Ridewell has the sole discretion and authority to approve or deny a claim and authorize the repair or replacement of suspension parts. All parts must be held until the warranty claim is closed.

Parts that need to be returned for warranty evaluation will be issued a Returned Materials Authorization (RMA). Parts must be returned to Ridewell with the transportation charges prepaid. The transportation charges will be reimbursed if the warranty claim is approved.

This non-transferable warranty is in lieu of all other expressed or implied warranties or representations, including any implied warranties of merchantability or fitness or any obligations on the part of Ridewell. Ridewell will not be liable for any business interruptions, loss of profits, personal injury, any costs of travel delays or for any other special, indirect, incidental or consequential losses, costs or damages.

Contact Ridewell Warranty Dept. at 417.833.4565 - Ext. 135, for warranty information.